EM-CAN
CANopen Protocol Instruction Manual

Revision 1.0

Address: 15-20/F, Block B, Nanshan I Valley, No.3185, Shahe West Road, Nanshan District, Shenzhen, Guangdong, 518055, China

Tel: (86)755-26409254 ***Fax:*** (86)755-26402718

Web: www.leadshine.com ***Sales:*** sales@leadshine.com

Support: tech@leadshine.com

Notice

Read this manual carefully before any assembling and using. Incorrect handling of products in this manual can result in injury and damage to persons and machinery. Strictly adhere to the technical information regarding installation requirements.

Record of Revisions

Revision	Date	Description of Release
1.0	*Mar, 2017*	*Initial Release*

TABLE OF CONTENTS

1 Port Connection and Settings

1.1 CAN Bus Connectors

EM556-CAN's CAN port adopt double couplet belt shielded RJ45 terminal (Adopt standard RJ45 norm).

RJ45 port PIN sequence definition	PIN No.	Signal	Function description
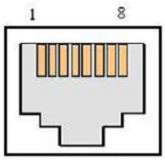	**1**	CAN_H	CAN signal high
	2	CAN_L	CAN signal low
	3	CAN_GND	CAN signal earth
	4-5	NC	
	6	NC	
	7	CAN_SHLD	Reserved GND
	8	NC	

1.2 EM556-CAN Communication Parameter Setting

For different types of drives, the communication parameter setting is not the same, please refer to the product manual for details, take EM556-CAN for example.
Setting range of drive's communication address is 1-127 (Drive's communication address must set to be other value because of some master stations also need to set communication address), EM556-CAN's CAN address have 7 bits in total, low 5 bits address are defined bySW1-SW5, high 2 bits address are defined bySW1-SW5, specific definition of low 5 bits CAN address :

CAN address ID (Low 5 bits)	SW1	SW2	SW3	SW4	SW5
1	off	on	on	on	on
2	on	off	on	on	on
3	off	off	on	on	on
4	on	on	off	on	on
5	off	on	off	on	on
6	on	off	off	on	on
7	off	off	off	on	on
8	on	on	on	off	on
9	off	on	on	off	on
10	on	off	on	off	on
11	off	off	on	off	on
12	on	on	off	off	on
13	off	on	off	off	on
14	on	off	off	off	on
15	off	off	off	off	on
16	on	on	on	on	off
17	off	on	on	on	off

18	on	off	on	on	off
19	off	off	on	on	off
20	on	on	off	on	off
21	off	on	off	on	off
22	on	off	off	on	off
23	off	off	off	on	off
24	on	on	on	off	off
25	off	on	on	off	off
26	on	off	on	off	off
27	off	off	on	off	off
28	on	on	off	off	off
29	off	on	off	off	off
30	on	off	off	off	off
31	off	off	off	off	off

Baud rate can be set by external DIP switch, specific settings as below:

Baud Rate	SW6	SW7	Communication range
Default(100K, can use upper computer to preset value)	on	on	550m
250K	off	on	250m
500K	on	off	100m
1M(factory setting)	off	off	25m

EM556-CAN adopt built-in terminal resistance, can select by SW8, the SW8 of the drive which is at the end of bus must be switch to "on".

2 CANopen Communication

This chapter mainly introduce CANopen protocol and Leadshine CANopen drive's communication function

2.1 CANopen Protocol Overview

CAN(Controller Area Network) fieldbus only define physical layer, data link layer, but not application layer; It is not complete. Need a high-level protocol to define specific function of different data bits in the packet. Meanwhile, along with more and more widely useing of CAN bus in industrial automation. Even more urgent needs an open, standardized, high-level protocol. CANopen is a high-level protocol which is based on CAN. Is a standard protocol which defined by CiA(CAN-in-Automation), accepted widely in a short time after released. Depend on support of CANopen protocol, different factory's devices which follow CANopen standard can be network connection through CAN bus.

In the OSI mode, relationship between CAN standard and CANopen protocol as follow:

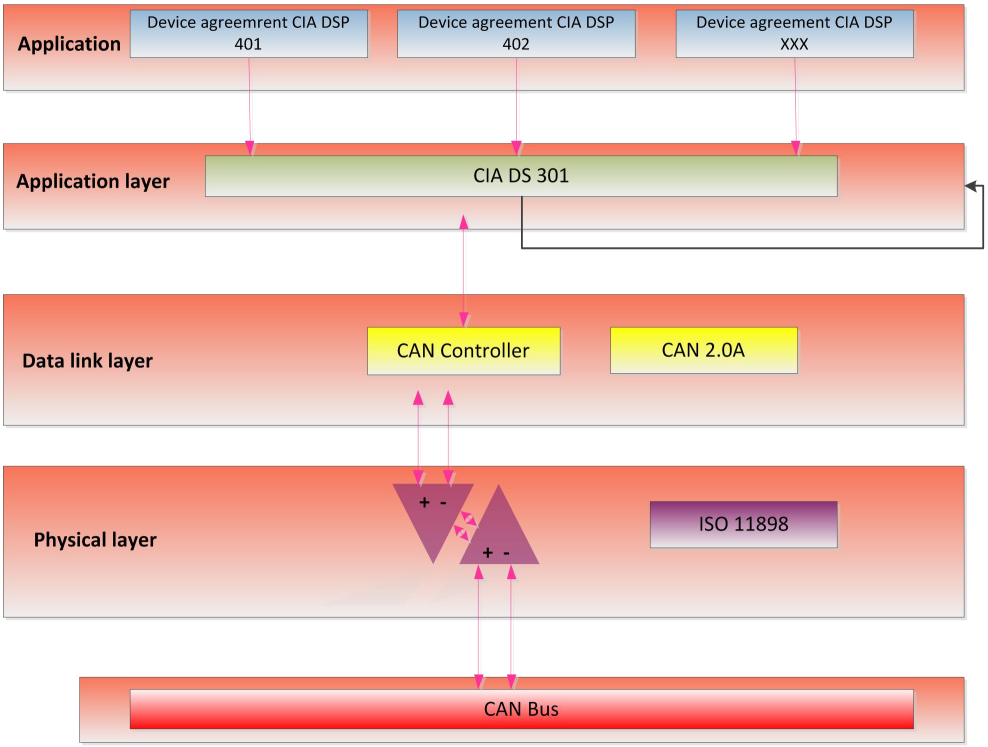

CANopen protocol provides a standard group of communication object: contains PDO(Process Data Objects), SDO(Service Data Objects) and some specific function Time Stamp, synchronous information (Sync message), E mergency message ; also formulate network management data, such as Boot-up message, network management information (NMT message) and Error Control message.

2.2 CANopen Communication Services

EM556-CAN follow CANopen norm:

◊ Fellow CAN 2.0A standard

◊ Conform to CANopen standard protocol DS 301 V4.02

◊ Conform to CANopen standard protocol DSP 402 V2.01

Leadshine's CANopen drive support service :

◊ Support NMT Slave service

◊ Equipment monitoring: Support the heartbeat packets, node guarding

◊ Support PDO service: Each slave station can configure maximum 3 TxPDO and 3 RxPDO

◊ PDO Transmission type: Support the event-trigger, time-trigger, synchronizing cycle, Synchronous acyclic

◊ Support SDO service

◊ Support Emergency Protocol

2.3 CANopen Predefined Connections Setting

In order to reduce simple network configuration work, CANopen defined compulsory default identifier distribution list. These identifier are available in pre-operational status, modifiable by dynamic assignment. CANopen device must provide identifier to its supported communication object.

11bits CAN - ID, contains 4 bits function code and 7 bits Node-ID , as shown below:

Function code				Node ID						
10	9	8	7	6	5	4	3	2	1	0

Node-ID range is 1-127(0 are not allowed to be used).

Predefined connection group defines 3 receive PDO(RXPDO), 1transmit PDO(TXPDO), 1 SDO (occupy 2 CAN-ID), 1 emergency object and 1 node error control ID. Also support don't need to be confirmed NMT Module Control service and synchronization object broadcast. Definitions are shown in table below.

CANopen predefine broadcast object of master/slave connection group			
Object	Function code	COB-ID	Object dictionary index
NMT modular control	0000	0x000	—
Synchronization	0001	0x080	1005H,1006H,1007H
CANopen Master/slave connection group equivalent object			
Object	Fuction code	COB-ID	Object dictionary index
Emergency	0001	0x081-0x0FF	1024H,1015H
TXPDO1(Transmit)	0011	0x181-0x1FF	1800H
RXPDO1(Receive)	0100	0x201-0x27F	1400H
TXPDO3(Transmit)	0111	0x381-0x3FF	1802H
RXPDO3(Receive)	1000	0x401-0x47F	1402H
TXPDO4(Transmit)	1001	0x481-0x4FF	1803H
RXPDO4(Receive)	1010	0x501-0x57F	1403H
SDO(Server transmit)	1011	0x581-0x5FF	1200H
SDO(Client transmit)	1100	0x601-0x67F	1200H
NMT Error control	1110	0x701-0x77F	1016H-1017H

Remarks:

⊙ PDO/SDO transmit/receive is relative to the side of the (slave)CAN node.

⊙ NMT error control contains node guarding, heartbeat and Boot-up protocol.

ID address distribution list corresponds to predefined master-slave connection group, because all the peer to peer ID is different, therefore, only one master device(know all the connection node ID) can communicate with every connected slave node in peer-to-peer manner. Two connected slave node can not communicate.

2.4 Object Directory (OD)

2.4.1 Object Dictionary Overview

Object dictionary is a well-organized object group. Each object adopt a 16 bits index to addressing, In order to allow access to single element of the data structure, at the same time defines a 8 bits sub index, the structure of the object dictionary in the following table:

Index	Object

0000H	Unused
0001H——001FH	The standard data type, such as Bool, Integer16 etc.
0020H——003FH	Complex data type, such as PDO Communication Parameters (PDOCommpar) etc.
0040H——005FH	Manufacturer defined responsible data type
0060H——007FH	Standard data type regulated by device profile
0080H——009FH	Complex data type regulated by device profile
00A0H——0FFFH	Reserved area
1000H——1FFFH	Communication protocol area, such as equipment types, PDO quantity etc.
2000H——5FFFH	Manufacturer specific profile area
6000H——9FFFH	Standard device profile area, such as DSP 402 object dictionary area
A000H——FFFFH	Reserved area

Every CANopen node in the network has object dictionary——Contains device and its network behavior description the all parameters of the r.
Node's object dictionary is described in EDS: Electronic Data Sheet. If the node describe its action strictly according to EDS, also ok. Actually, node only need to provide necessary object in the object dictionary (there are rarely required items in CANopen regulation). And other selectable, form the node part which is functional configurable object.
CANopen contains lots of profiles ; Among them, communication profile, describes chief modality of object dictionary and communication profile area's object/communication parameters of object dictionary. At the same time describes the CANopen communication object, this protocol applies to all CANopen equipment. Besides, there are lots of device profile, define the object in the object dictionary for a variety of different types of equipment. Device profile describes function/name/index/sub-index for each object which is in the object dictionary. And whether this object is necessary or selectable, this object is read only, write only or read/write, and so on. Device profile defines which object is required or selectable in the object dictionary. If the required items exceed those which can provided by device profile. Already reserved sufficient space which can provide to manufacturer in device profile.
Communication parameters parts which described in object dictionary is the same to all CANopen device(such as object is the same in object dictionary, object value does not need to keep the same). Device related parts which described in the object dictionary is different to different kinds of devices.

2.4.2 Object Dictionary Structure

DS 301 specifies the basic structure of the object dictionary, as below:

Index	Object	Name	type	Property	Required /Closeable

2.4.3 Object Type

The corresponding "object " CANopen object code in above table as follow:

Object name	Object code	Specification
NULL	0	No data
DOMAIN	2	a mass of data, Such as executable code segment

VAR	7	variable, such as Bool, Integer 8 bits etc
ARRAY	8	Array, lots of the same type of data
RECORD	9	Record, can be a lot of different types of data

2.4.4 Accessing Properties

Property	Specification
RW	read-write
WO	write only
RO	read only
CONST	Constant, read only

2.4.5 Communication Object Dictionary

EM556-CAN Communication object dictionary list as follows:

Index	Object type	Name	Data type	Accessing Properties
1000H	VAR	Device type	Integer 32 bits	RO
1001H	VAR	Error Register	Integer 8 bits	RO
1003H	ARRAY	Predefined error area	Integer 32 bits	RO
1005H	VAR	PDO synchronization ID	Integer 32 bits	RW
1006H	VAR	Communication cycle	Integer 32 bits	RW
1007H	VAR	PDO time window	Integer 32 bits	RW
1008H	DOMAIN	Device name	character string	CONST
1009H	VAR	Hardware Version	character string	CONST
100AH	VAR	Software Version	character string	CONST
1014H	VAR	Emergency message	Integer 32 bits	RW
1017H	VAR	Producer heartbeat time	Integer 16 bits	RW
1018H	RECORD	Identity object	Integer 32 bits	RO
1200H	RECORD	Server SDO parameters	SDO parameters	RO
1400H	RECORD	Transmit PDO parameters	PDO parameters	RW
1402H	RECORD	Receive PDO parameters	PDO parameters	RW
1403H	RECORD	Receive PDO parameters	PDO parameters	RW
1404H	RECORD	Receive PDO parameters	PDO parameters	RW
1405H	RECORD	Receive PDO parameters	PDO parameters	RW
1600H	RECORD	Receive PDO mapping	PDO mapping	RW
1602H	RECORD	Receive PDO mapping	PDO mapping	RW
1603H	RECORD	Receive PDO mapping	PDO mapping	RW
1604H	RECORD	Receive PDO mapping	PDO mapping	RW
1605H	RECORD	Receive PDO mapping	PDO mapping	RW
1800H	RECORD	Transmit PDO parameters	PDO parameters	RW
1802H	RECORD	Transmit PDO parameters	PDO parameters	RW
1803H	RECORD	Transmit PDO parameters	PDO parameters	RW
1804H	RECORD	Transmit PDO parameters	PDO parameters	RW
1805H	RECORD	Transmit PDO parameters	PDO parameters	RW
1A00H	RECORD	Transmit PDO mapping	PDO mapping	RW
1A02H	RECORD	Transmit PDO mapping	PDO mapping	RW
1A03H	RECORD	Transmit PDO mapping	PDO mapping	RW
1A04H	RECORD	Transmit PDO mapping	PDO mapping	RW
1A05H	RECORD	Transmit PDO mapping	PDO mapping	RW

DS 301 Communication object dictionary details

1000H: device type

Index	1000H
Name	device type
Object type	VAR

Data type	Integer 32 bits
Accessing Properties	RO
PDO mapping	Cannot mapping
Value range	0-232-1
Default Values	0x20192

1001H: Error Register

Index	1001H
Name	error register
Object Type	VAR
Data type	Integer 8 bits
Accessing Properties	RO
PDO mapping	Cannot mapping
Value range	0-28-1
Default Values	0x0

1003H: Device type

Index	1003H
Name	Predefined error area
Object Type	ARRAY
Data type	Integer 32 bits

Sub-index

Sub-index	0x0
description	Error quantity
Accessing Properties	RW
PDO mapping	Cannot mapping
Value range	0-28-1
Default Values	0x4

Sub-index

Sub-index	0x1-0x4
description	standard error area
Accessing Properties	RO
PDO mapping	Cannot mapping
Value range	0-232-1
Default Values	0x0

1005H: device type

Index	1005H
name	PDO Synchronization ID
Object Type	VAR
Data type	Integer 32 bits
Accessing Properties	RW
PDO mapping	Cannot mapping
Value range	0-232-1
Default Values	0x80

1006H: Communication cycle

Index	1006H
name	communication cycle
Object Type	VAR
Data type	Integer 32 bits
Accessing Properties	RW
PDO mapping	Cannot mapping

Value range	0-232-1
Default Values	0x0

1007H: PDO Time Window

Index	1007H
Name	PDO Time Window
Object Type	VAR
Data type	Integer 32 bits
Accessing Properties	RW
PDO mapping	Cannot mapping
Value range	0-232-1
Default Values	0x0

1008H: Device name

Index	1008H
Name	Device name
Object type	VAR
Data type	String
Accessing property	CONST
PDO mapping	Cannot mapping
Value range	Unknown
Default value	DS402 Drive-LeadShine

1009H: Hardware version

Index	1009H
Name	Hardware version
Object type	VAR
Data type	String
Accessing property	CONST
PDO mapping	Cannot mapping
Value range	Unknown
Default value	V1.04

100AH: Software version

index	100AH
Name	Software version
Object type	VAR
Data type	String
Accessing property	CONST
PDO mapping	Cannot mapping
Value range	Unknown
Default value	V1.00

1014H: Emergency message

Index	1014H
Name	Emergency message
Object type	VAR
Data type	Integer 32 bits
Accessing property	RW
PDO mapping	Cannot mapping
Value range	0-232-1
Default value	0x80000000

1017H: Producer heartbeat time

Index	1017H
Name	Producer heartbeat time
Object type	VAR

Data type	Integer 16 bits
Accessing property	RW
PDO mapping	Cannot mapping
Value range	0-216-1
Default value	0x0

1018H: Identity object

Index	1018H
Name	Identity object
Object type	RECORD
Data type	Integer 32 bits

Sub-index

Sub-index	0x0
Description	Sub-index quantity
Accessing property	RO
PDO mapping	Cannot mapping
Value range	1-4
Default value	0x4

Sub-index

Sub-index	0x1
Description	Manufacturer ID
Accessing property	R0
PDO mapping	Cannot mapping
Value range	0-232-1
Default value	0x00000331

Sub-index

Sub-index	0x2
Description	Product code
Accessing property	RO
PDO mapping	Cannot mapping
Value range	0-232-1
Default value	0x0

Sub-index

Sub-index	0x3
Description	version number
Accessing property	RO
PDO mapping	Cannot mapping
Value range	0-232-1
Default value	0x100

Sub-index

Sub-index	0x4
Description	Serial number
Accessing property	RO
PDO mapping	Cannot mapping
Value range	0-232-1
Default value	0x1

1200H: Server SDO parameters

Index	1200H
Name	Server SDO parameters
Object type	RECORD
Data type	SDO parameters

Sub-index

Sub-index	0x0
Description	Sub-index quantity
Accessing property	RO
PDO mapping	Cannot mapping
Value range	0x2
Default value	0x2

Sub-index

Sub-index	0x1
Description	COB-ID(user to server)
Accessing property	RO
PDO mapping	Cannot mapping
Value range	0-232-1
Default value	0x600+Node-ID

Sub-index

Sub-index	0x2
Description	COB-ID(server to user)
Accessing property	RO
PDO mapping	Cannot mapping
Value range	1-27-1
Default value	0x580+ Node-ID

1400H-1405H: Receive PDO parameters

Index	1400H-1405H
Name	Receive PDO parameters
Object type	RECORD
Data type	PDO parameters

Sub-index

Sub-index	0x0
Description	Sub-index quantity
Accessing property	RO
PDO mapping	Cannot mapping
Value range	0x2-0x5
Default value	0x5

Sub-index

Sub-index	0x1
Description	PDO COB-ID
Accessing property	RW
PDO mapping	Cannot mapping
Value range	0-232-1
Default value	0x1400: 0x40000200+ Node-ID 0x1402: 0x40000400+ Node-ID 0x1403: 0x40000500+ Node-ID 0x1404: 0xC0000000 0x1405: 0xC0000000

Sub-index

Sub-index	0x2
Description	Transmit type
Accessing property	RW
PDO mapping	Cannot mapping
Value range	0-28-1
Default value	255(asynchronous mode, refer to appendix B)

Sub-index

Sub-index	0x3

Description	Forbidden time
Accessing property	RW
PDO mapping	Cannot mapping
Value range	0-216-1
Default value	0

Sub-index

Sub-index	0x4
Description	Event Timer
Accessing property	RW
PDO mapping	Cannot mapping
Value range	0-216-1
Default value	0

1600H-1605H: Receive PDO mapping

Index	1400H-1405H
Name	Receive PDO mapping
Object type	RECORD
Data type	PDO mapping

Sub-index

Sub-index	0x0
Description	Mapping object quantity
Accessing property	RW
PDO mapping	Cannot mapping
Value range	1-64
Default value	0x1

Sub-index

Sub-index	0x1-0x8
Description	PDO mapping object quantity
Accessing property	RW
PDO mapping	Cannot mapping
Value range	0-232-1
Default value	0x0

1800H-1805H: Transmit PDO parameter

Index	1800H-1805H
Name	Transmit PDO parameter
Object type	RECORD
Data type	PDO parameter

Sub-index

Sub-index	0x0
Description	Sub-index quantity
Accessing property	RO
PDO mapping	Cannot mapping
Value range	0x2-0x5
Default value	0x5

Sub-index

Sub-index	0x1
Description	PDO COB-ID
Accessing property	RW
PDO mapping	Cannot mapping
Value range	0-232-1
Default value	0x1800: 0x00000180+ Node-ID

	0x1802: 0x00000380+ Node-ID 0x1803: 0x00000480+ Node-ID 0x1804: 0x80000000 0x1805: 0x80000000

Sub-index

Sub-index	0x2
Description	Transmit type
Accessing property	RW
PDO mapping	Cannot mapping
Value range	$0\text{-}2^{8}\text{-}1$
Default value	0x1800:255(asynchronous mode, refer to appendix: 1

Sub-index

Sub-index	0x3
Description	Forbidden time
Accessing property	RW
PDO mapping	Cannot mapping
Value range	$0\text{-}2^{16}\text{-}1$
Default value	0

Sub-index

Sub-index	0x4
Description	Event Timer
Accessing property	RW
PDO mapping	Cannot mapping
Value range	$0\text{-}2^{16}\text{-}1$
Default value	0

1A00H-1A05H: Transmit PDO mapping

Index	1A00H-1A05H
Name	Transmit PDO mapping
Object type	RECORD
Data type	PDO mapping

Sub-index

Sub-index	0x0
Description	Mapping object quantity
Accessing property	RW
PDO mapping	Cannot mapping
Value range	1-64

Default value	0x1

Sub-index

Sub-index	0x1-0x8
Description	PDO Mapping object quantity
Accessing property	RW
PDO mapping	Cannot mapping
Value range	$0\text{-}2^{32}\text{-}1$
Default value	0x0

2.5 Network Management (NMT)

NMT provide network management services. This service is realized by master-slave communication mode. (have only one NMT master node).

2.5.1 NMT Modular Control

Only NMT master node can transmit NMT modular control packet, all slave node must support NMT NMT modular controlservice. Module control does not need reply. The message format is as follows:

NMT Master node ⟹ NMT Slave node

COB-ID	Byte 0	Byte 1
0x000	CW	Node-ID

When Node-ID=0, all NMT slave node will be addressing. Corresponding relation between command word's values and service as following table:

CW	NMT service
1(01H)	Activate the remote node
2(02H)	Stop the remote node
128(80H)	Get into pre-operating state
129(81H)	Nodes reset
130(82H)	Communication reset

2.5.2 NMT Node Protection

Through this service, NMT master node can check current status of each node. The master node send a remote frame format is as follows:

NMT Master node ⟹ NMT Slave node

COB-ID
0x700+Node-ID

NMT Slave node's response packet format as below:

NMT Slave node ⟹ Master node

COB-ID	Byte 0

0x700+Node-ID	Bit 6:0 status

The data includes a trigger bit(bit7),.trigger bit must set to be "0" or "1" during each time of Node protection response alternately. trigger bit must set to be "0" in the first time of node protection request. bit0-6 shows node status, The corresponding relationship of value and status are shown in below table:

Value	Status
0(00H)	Initialization
1(01H)	disconnected
2(02H)	connected
3(03H)	Ready
4(04H)	Stop
5(05H)	Operating
127(7FH)	Pre-operating

Remark: State 0 does not appear in node protection response.

A node can be configured as periodic packet which be called as Heartbeat packet.

The heartbeat producers ⟹ Consumer

COB-ID	Byte 0
0x700+Node-ID	Status

The meaning of its corresponding values shown in the following table:

Status value	meanning
0	Boot-up
4	Stop
5	operating
127	Pre-operating

2.5.3 NMT Boot-up

NMT slave node post a Boot-up packet to inform NMT master node that it have got into the status from initialization to pre-operating.

NMT Slave node ⟹ NMT Master node

COB-ID	Byte 0
0x700+Node-ID	0

2.5.4 NMT Communication State Machine

CANopen communication state machine as shown in the figure below:

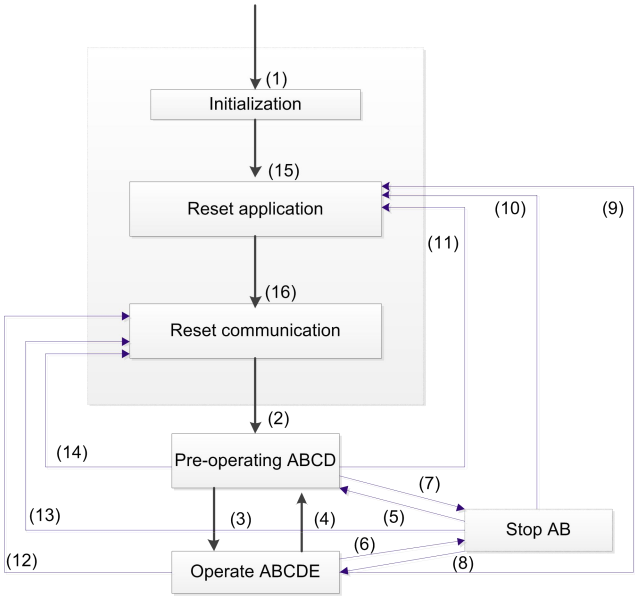

(1) After power on, enter into initialized status automatically

(2) Automatically enter into pre-operation status

(3) (6) Activate the remote node

(4) (7) Enter into pre-operation status

(5) (8) Stop the remote node

(9) (10) (11) Reset the node

(12) (13) (14) Reset the communication

(15) Enter into reset application status automatically

(16) Enter into reset communication status automatically

A: NMT

B: Node Guard

C: SDO

D: Emergency

E: PDO

F: Boot-up

Enter into pre-operation status after finish device initialization (Umbrella name of reset initialization, reset the application and communication). Device who is in this status can set parameters and distribute ID by SDO(Such as use configuration tool) . Then, node enter into pre-operation status directly.

2.6 Process Data Objects (PDO)

PDO adopt producer/customer mode, PDO data transmit can be one-on-one or one-to-many manner. Each PDO packet include transmit PDo(TxPDO) and receive PDO(RxPDO) packet, its transmit style defined as PDO communication parameter index (First group of receive PDO packet set in index 1400H, second group of transmit PDO packet set in index 1800H).
All PDO transmit data must be mapped onto the corresponding index area through the object dictionary. Take 1600H and 1A00H which are defined in DSP 402 for example:

Remark: Value of object dictionary in the figure is only used for illustrating, does not have practical meaning.

Master station transmit packet to slave station's PDO

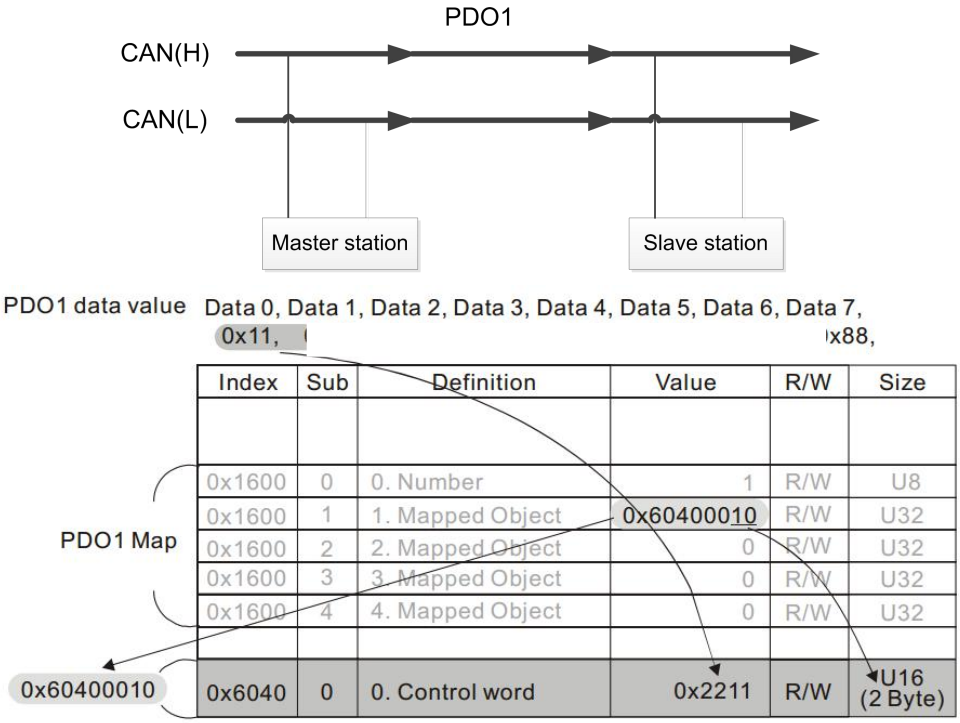

Relationship between PDO parameter(1400H) and PDO mapping(1600), PDO data's transmit process as below (Take node2 for example) . The direction of the arrow in the figure shows master station data processing direction.

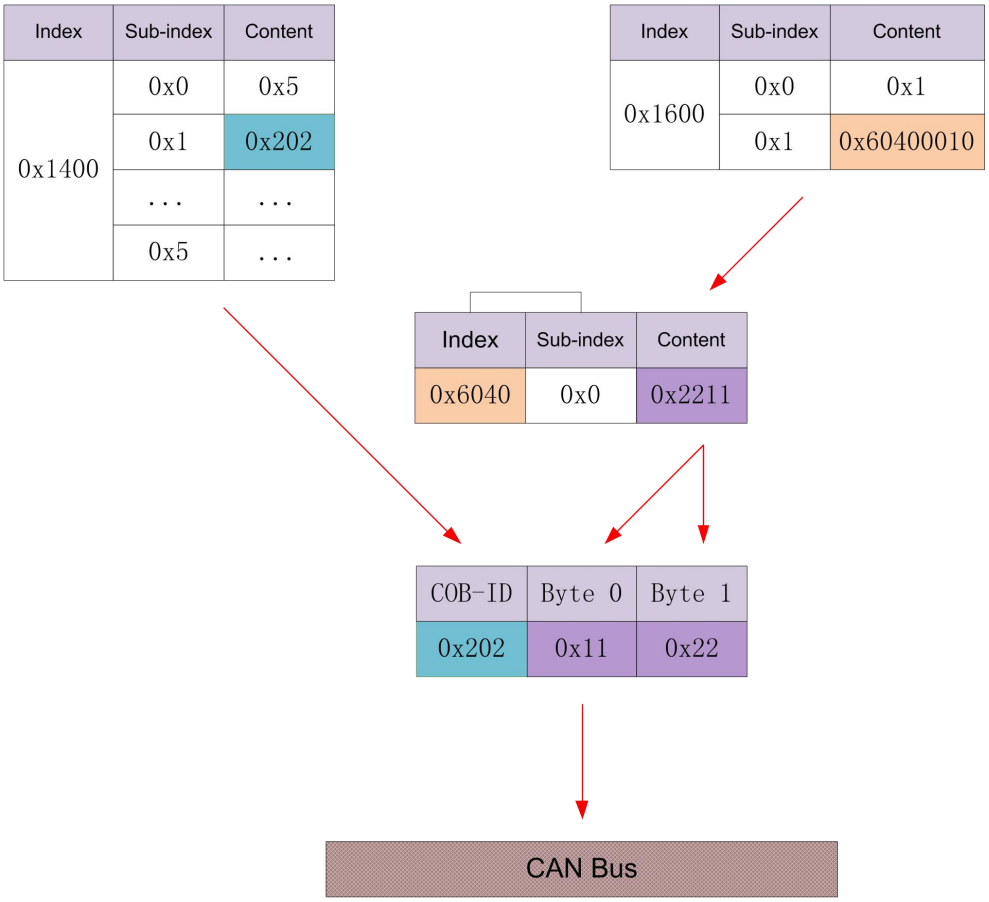

The master station receive feedback packet which return from slave station:

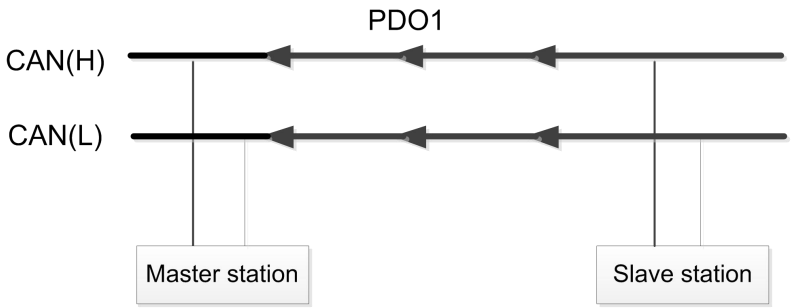

PDO1 data value Data 0, Data 1, Data 2, Data 3, Data 4, Data 5, Data 6, Data 7,
0xF3, 0x00,

PDO1 Map

Index	Sub	Definition	Value	R/W	Size
0x1A00	0	0. Number	1	R/W	U8
0x1A00	1	1. Mapped Object	0x60410010	R/W	U32
0x1A00	2	2. Mapped Object	0	R/W	U32
0x1A00	3	3. Mapped Object	0	R/W	U32
0x1A00	4	4. Mapped Object	0	R/W	U32
0x6041	0	Stalusword	0xF3	R/W	U16

Relationship between PDO parameter(1800H) and PDO mapping(1A00H), PDO data's transmit process as below (Take node2 for example) . The direction of the arrow in the figure shows slave station data processing direction.

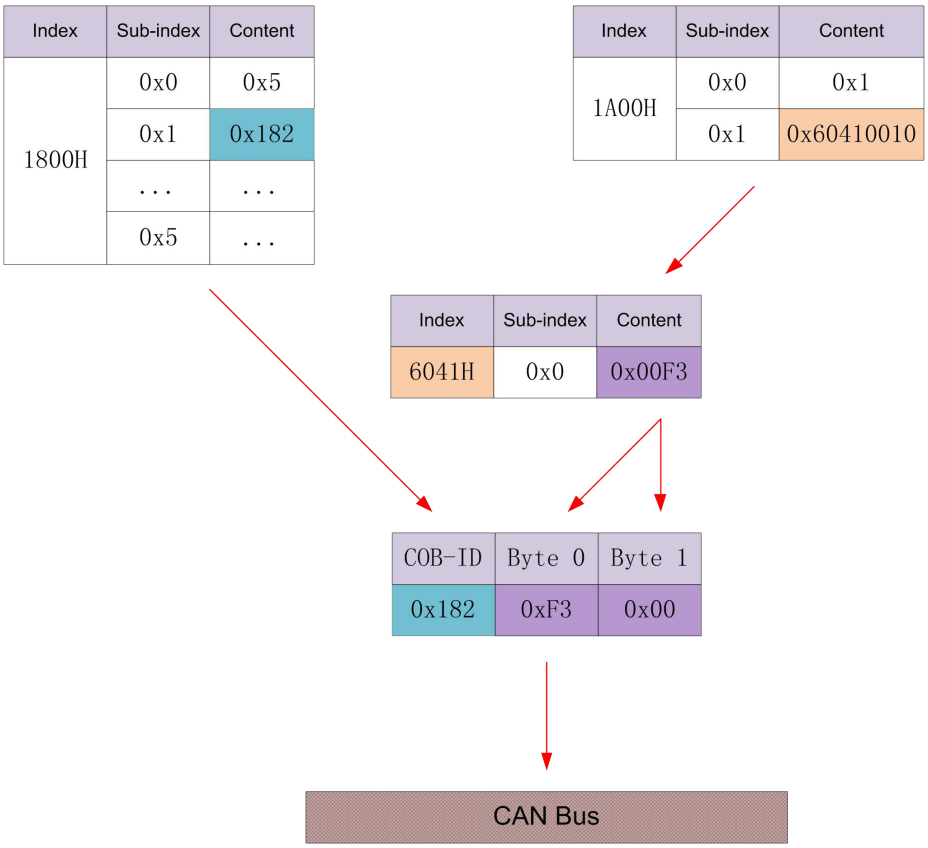

2.7 Service Data Objects (SDO)

SDO is used for accessing a device's object dictionary. The visitor is referred to as a customer(client), CANopen devices whose object dictionary been accessed and provide

requested service are referred as server. Client's CAN packet and server's reply CAN packet always contain 8bits data.(Although, no all data bytes always have certain meaning). A client's request must have a response from the server.

Its basic structure is as follows:

Client ⇨ Server/Server ⇨ Client

Byte 0	Byte 1:2	Byte 3	Byte 4:7
SDO CW	Object Index	Object sub-index	data

For example, use SDO message write the value of 0x20F0 into ID "2", object dictionary's index is 1801H and sub-index is 3.

Client ⇨ Server

COB-ID	Byte 0	Byte 1	Byte 2	Byte 3	Byte 4	Byte 5	Byte 6	Byte 7
602	2B	01	18	03	F0	20	00	00
Server ⇨ Client								
582	60	01	18	03	00	00	00	00

Use below SDO message, read the data of object dictionary whose index is 1810H and sub-index is 3.

Client ⇨ Server

COB-ID	Byte 0	Byte 1	Byte 2	Byte 3	Byte 4	Byte 5	Byte 6	Byte 7
602	40	01	18	03	00	00	00	00
Server ⇨ Client								
582	4B	01	18	03	F0	20	00	00

SDO client or server stop SDO transmit by transmit the following format message:

Client ⇨ Server/Server ⇨ Client

Bit	7	6	5	4	3	2	1	0
	1	0	0	-	-	-	-	-

In SDO's suspended packet, data byte 0 s and 1 s signify object index. Byte 2 signify sub-index, bytes 4 to 7 contains 32-bit suspended code, it describe why suspend transmit packet. Its detailed description can refer to appendix D.

2.8 Emergency Object

Emergency instructions packet triggered by the fatal error which is inside of the device, send to other equipment by the related application equipment with the highest priority. Apply to interrupt type error alarm signal.

An emergency message consists of 8 bytes , format as follows:

Transmitting end ⇨ Receiving end

COB-ID	Byte 0:1	Byte 2	Byte 3:7
0x080+Node -ID	Emergency error code	Error register (1001H)	Manufacturers designated area

EM556-CAN supported emergency error code can be found in the appendix C

The recent emerging error will be saved in "predefined error field" object dictionary (index is 1003H); users can read these message by SDO; But if the drive power off, EM556-CAN will not store these error message. The current error type will be stored in the object dictionary errors register (index is 1001H).

Device can map inner error into this status byte, and can quickly check the wrong type.

The table below for error register's byte definition:

Byte	Error type
0	General Error
1	Current
2	Voltage
3	Temperature
4	Communication
5	Device protocol specified error
6	Recerved
7	Manufacturer specified error

3 DS402 Control of EM-CAN

3.1 Basic Movement Steps for EM-CAN Drives

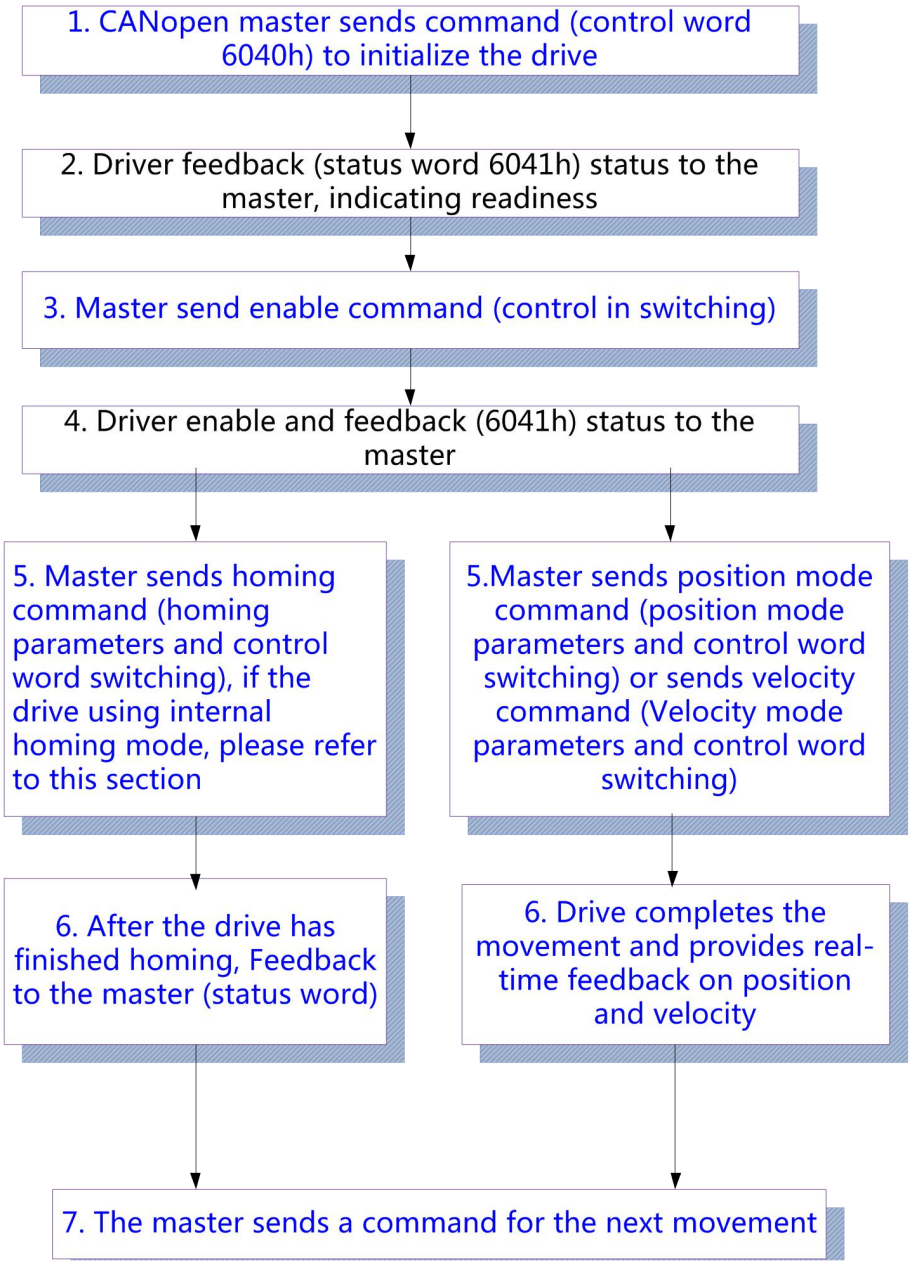

3.2 402 State Machine

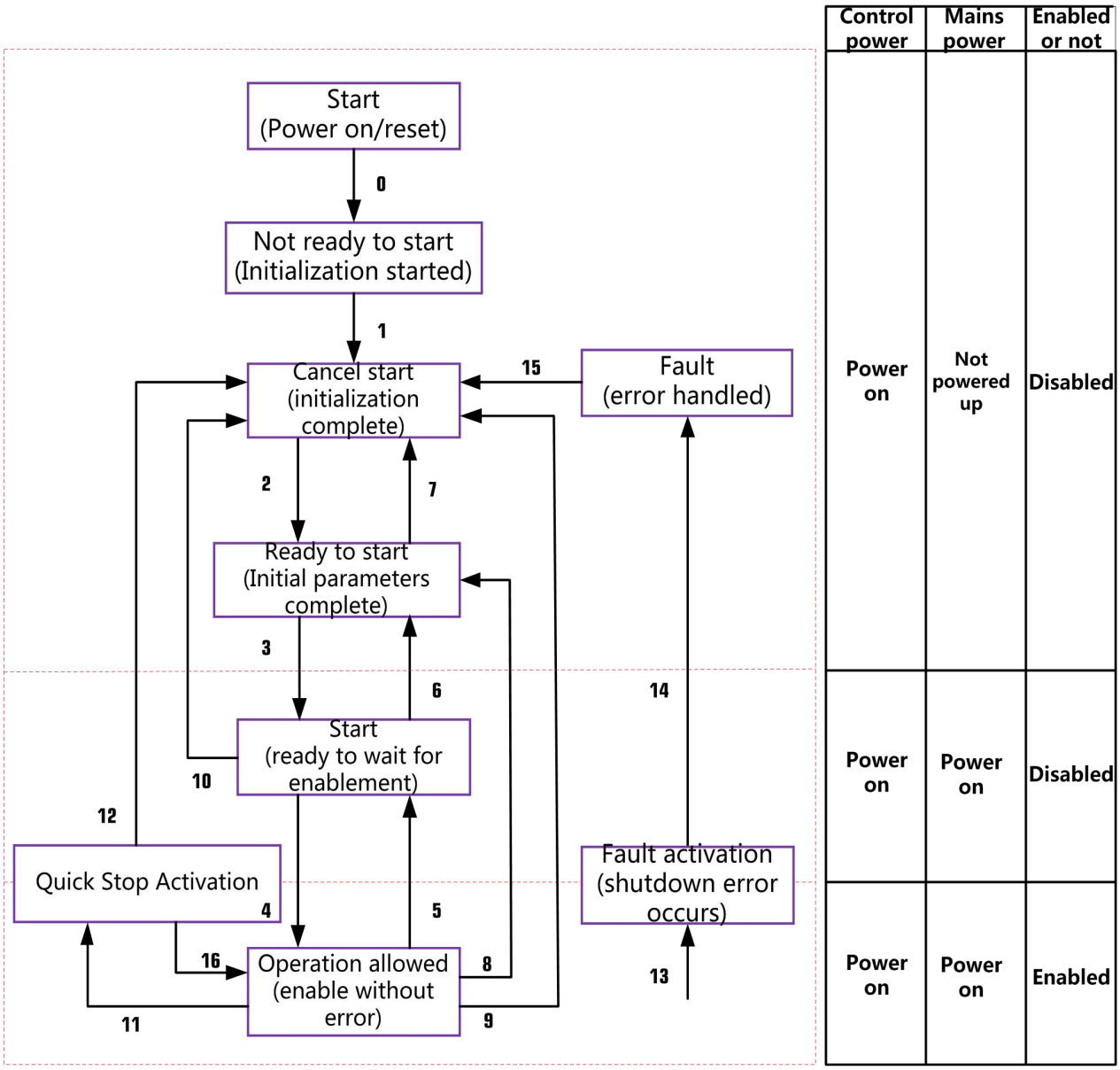

Figure 3.1 The 402-state machine of the EM-CAN

Status	EM-CAN driver action
Not ready to start	The drive is powered and initialization begins; if there is a holding brake, the holding brake is locked; the axis is not enabled
Cancel start	Initialization complete, parameters initialized, no fault; axis not enabled
Ready to start	Parameter initialization complete; axis not enabled
Start	Drive ready, waiting for enable
Allowed operations	Enabled, no errors
Quick stop activation	Quick Stop Start
Fault activation	Stopped error occurred, not processed; axis not enabled
Failure	Error handled, waiting for switch 402 state machine from error (Fault) to cancel start (Switch on disabled), axis not enabled

The transition of the 402 state machine is done by relying on the master to operate the control word (6040h) of the EM-CAN stepper driver, refer to section 3.4.6 for details.

Table 3.2 Correspondence table of state transitions

402 state conversion		Trigger conditions	6040h example *1)	Action	6041h state *2)
0	Start -> Not ready to start	control power on/reset	Automatic power-on switching without control commands	Drive self-test and initialization	0000h
1	Not ready to start -> Cancel start	Automatic conversion after initialization	No order/0000h	Communication status pre-operation and above *3)	×0h20
2	Cancel Start -> Ready to Start	Receive master power off command *4)	0006h	Drive parameter initialization in progress	23×1h
3	Ready to start -> Start	Received from the main site Start command	0007h	Main power on wait enable	×233h
4	Start -> Allow operation	Received from the main site Allow operation command	000Fh	Motor shaft enable	×7h23
5	Allow operation -> Start	Master not running operation command received	0007h	Motor shaft not enabled	×3h22
6	Start -> Ready to start	Receive master power off command	0006h	Turn off main power Control power remains on	22×1h
7	Ready to start ->	No voltage	0000h	No action	×0h26

	Cancel start	output command received from the master			
8	Allow operation -> Ready to start	Receive master power off command	0006h	Motor shaft not enabled Turn off main power	22×1h
9	Allow operation -> Cancel start	No voltage output command received from the master	0000h	Motor shaft not enabled Turn off main power	×0h26
10	Start -> Cancel Start	No voltage output command received from the master	0000h	Turn off main power Control power remains on	×0h26
11	Allow operation -> Quick stop activation	Received master quick stop command	0002h	Quick Stop Start	×7h30
12	Quick Stop Activation -> Cancel Activation	No voltage output command received from the master	0000h	Motor shaft not enabled Turn off main power	×0h34
13	-> Fault activation	The driver detected an error occurred	The drive will automatically switch to a fault stop state if an error occurs in any state other than "fault".	Downtime error occurred, waiting for processing	×Fh22
14	Fault activation -> Fault	Automatic changeover after fault shutdown	No order	Motor shaft not enabled Turn off main power	2×0Fh

15	Fault -> Cancel start	Fault reset command received from the master	0080h bit7 Rising edge is valid; all other commands are invalid.	If the error no longer exists, perform a fault reset action	×0h26

× means not affected by the status of this bit.

*1) The data of 6040h in this column is only used as the recommended command.

*2) The data of 6041h in this column is the state corresponding to the data of 6040h. *3) The communication state refers to the ESM state machine state in Section 2.4.

*4) It is master sending control command, not corresponding to physical power off action.

3.3 Device control object dictionary

Index	Object Type	Name	Data Type	Access Properties
6040H	VAR	Control word	Unsigned 16-bit	RW
6041H	VAR	Status word	Unsigned 16-bit	RO
6060H	VAR	Operation Mode	Signed 8-bit	RW
6061H	VAR	Operation mode display	Signed 8-bit	RO
6064H	VAR	Location Feedback	Signed 32-bit	RW
606CH	VAR	Speed Feedback	Signed 32-bit	RW
607AH	VAR	Target Location	Signed 32-bit	RW
607CH	VAR	Origin Offset	Signed 32-bit	RW
6081H	VAR	Protocol Speed	Unsigned 32-bit	RW
6082H	VAR	Position mode start/stop speed	Unsigned 32-bit	RW
6083H	VAR	Protocol acceleration	Unsigned 32-bit	RW
6084H	VAR	Protocol deceleration	Unsigned 32-bit	RW
6085H	VAR	Quick stop deceleration	Unsigned 32-bit	RW
6098H	VAR	Return to the origin method	Signed 8-bit	RW
6099H	ARRAY	Home mode speed	Unsigned 32-bit	RW
609AH	VAR	Home mode acceleration	Unsigned 32-bit	RW
60FFH	VAR	Target speed in speed mode	Signed 32-bit	RW

3.4 Operation mode setting

The EM-CAN series only supports non-synchronous modes: Protocol Position (PP) mode, Protocol Velocity (PV) mode and Home Position (HM) mode, this chapter introduces the relevant settings and operation methods of each mode.

1) Operation mode setting (6060h)

Index 6060h	Name	Object Structure	Data Type	Accessibility	Related Models	PDO Mapping	Data Range	Factory value

	Operation mode setting (target position)	VAR	Int32	RW	-	YES	-2^7~2^7	1

Subindex: 00
Set the operation mode, defined as follows.
1: Protocol Location Mode
3: Protocol speed mode
6: Origin mode
EM-CAN series drives currently only support these three motion modes, setting other values is not valid

2) Operation mode display (6061h)

Index 6061h	Name	Object Structure	Data Type	Accessibility	Related Models	PDO Mapping	Data Range	Factory value
	Display operation mode (target position)	VAR	Int32	RO	-	YES	-2^7~2^7	1

Subindex: 00
This parameter value is the same as the 6060 parameter value, and the parameter is available to read the current operation mode.

Notes:

A. Changing 6060h object data can switch the operation mode.

B. The 6061h object can be used to confirm the current mode of operation of the DM3E.

C. Switching different operation modes may require changing the mapping objects of RXPDO and TXPDO.

3.5 Common Functions in Operation Mode

3.5.1 Control word (6040H)

Index 6040h	Name	Object Structure	Data Type	Accessibility	Related Models	PDO Mapping	Data Range	Factory setting
	Control Word	VAR	Uint16	R/W	All	RPDO	0~65535	0

Subindex: 00
The control word bits are defined in the following table.

Bit(Bit)	Definition Description	Description
0	Start	0: Invalid 1: Effective
1	Voltage output	0: Invalid 1: Effective
2	Quick Stop	0: Valid 1: Invalid
3	Allowed operations	0: Invalid 1: Effective
4~6	-	These three definitions are related to the mode of operation. HM mode: Bit4 rising edge triggers home operation; Bit5,Bti6 undefined
7	Error Reset	For faults that can be reset and cleared. For a fault that can be reset and cleared, this bit changes from 0 to 1 to complete the fault reset.

		For non-clearable faults, this bit is held at 1 and other control command operations are invalid
8	Abort	PV mode, falling edge trigger operation, rising edge stop operation, repeatedly switchable operation stop
9~10	Reserved	Reserved
11~15	Manufacturer customization	Manufacturer customization

Note.

(1) Each Bit of the control word is meaningless when assigned alone, and must be used in conjunction with other bits to form an instruction.

(2) Bit4~Bit6 are related to the control mode of the driver, please see the relevant control mode of the driver for details.

3) Bit0~Bit3, and bit7 are the same in each mode. The commands must be sent in order before the drive can be converted in accordance with the CiA402 state, each command corresponds to a state, the specific combinations are shown in the following table.

Control commands	Bit7 combined with Bit3~Bit0					Device state machine transition
	Error Reset	Allowed operations	Quick Stop	Voltage output	Start	
	Bit7	Bit3	Bit2	Bit1	Bit0	
Power off	0	×	1	1	0	2;6;8
Start	0	0	1	1	1	3*
Start	0	1	1	1	1	3**
No output voltage	0	×	×	0	×	7;9;10;12
Quick Stop	0	×	0	1	×	7;10;11
Not allowed to operate	0	0	1	1	1	5
Allowed operations	0	1	1	1	1	4;16
Error Reset	Rise along	×	×	×	×	15

× means not affected by the status of this bit.

* indicates that this transition is performed in the device startup state.

** means no effect on the startup state and remains in the startup state.

3.5.2 Status word (6041H)

Index 6041h	Name	Object Structure	Data Type	Accessibility	Related Models	PDO Mapping	Data Range	Factory Settings
	Status word (Status Word)	VAR	Uint16	RO	All	TPDO	0~65535	-

Status word bit definition.

Bit(Bit)	Definition Description	Description
0	Ready to start	-
1	Start	-
2	Allowed operations	-
3	Errors, faults	-

4	Voltage output	-
5	Quick Stop	-
6	Not started	-
7	None	Reserved, undefined
8	Manufacturer customization	Reserved, undefined
9	Remote Control	0: Node invalid 1: CANopen remote control mode
10	Location Arrival	0: Not reached the target position or speed 1: Reach the target location or speed
11	Internal position overrun	0: Hardware limit is invalid 1: Set to 1 when hardware limit is valid
12~13	-	Depending on the mode of operation (see the following content description for specific definitions)
14~15	Reserved	Reserved

Note.

(1) After the control word 6040h sends the command in sequence, the drive feeds back a determined state.

(2) Status word each Bit bit read alone is meaningless, must need to be composed with other bits together to indicate the current state, the combination of bits 6 and bit0-bit3 represents the state of the device as shown in the following table for detailed definitions (× represents not affected by the status of this bit).

Bit 6 with 3:0 combination	Device Status Machine Status	Status of drive devices
××××,××××,×0××,0000	Not ready to start	The drive is powered and initialization begins; if there is a motor brake, the brake is locked; the axis is not enabled
××××,××××,×1××,0000	Cancel start	Initialization complete, parameters initialized, no fault; axis not enabled
××××,××××,×01×,0001	Ready to start	Parameter initialization complete; axis not enabled
××××,××××,×01×,0011	Start	Drive ready, waiting for enable
××××,××××,×01×,0111	Allowed operations	Enabled, no errors
××××,××××,×00×,0111	Quick stop activation	Quick Stop Start
××××,××××,×0×××,1111	Fault effect activation	Stopped error occurred, not processed; axis not enabled
××××,××××,×0×××,1000	Failure	Error handled, waiting for switch 402 state machine from Fault to Switch on disabled, axis not enabled

3) bits12~13, and bit8 are related to each operation mode (specific definitions are as follows)

Operation Mode	bit13	bit12	bit8
Protocol PP mode (PP)	Invalid	Invalid	Abnormal stop
Protocol PV mode (PV)	Invalid	Speed is 0	Invalid
HM mode (HM)	Origin finding error	Origin completion	Abnormal stop

Note: Bit 8 non-normal stop is generally valid in hardware limit or deceleration stop state.

3.5.3 Digital input and output related settings and status

The settings and status indications related to the digital IO of the EM-CAN product are described as follows.

1) Input settings

Index 2152h		Definition	Factory value	Data Type	Accessibility	Data Range
				Uint32	R/W/S	0~32768
sub-index	01	External input port IN1 function	1	Description: This parameter sets the function of the external input, as follows. 1: Origin signal 2: Positive limit 4: Negative limit 8: Quick Stop		
	02	External input port IN2 function	2			
	03	External input port IN3 function	4			
	04	External input port IN4 function	8			
Index 2153h		**Definition**	**Factory value**	**Data Type**	**Accessibility**	**Data Range**
				Uint32	R/W/S	50~60,000
sub-index	01	External input port IN1 filtering time	1000	Description: This parameter sets the filtering time of the external input Unit: us Note that larger number settings may result in a delay.		
	02	External input port IN2 filtering time	1000			
	03	External input port IN3 filtering time	1000			
	04	External input port IN4 filtering time	1000			
Index 2154h		**Definition**	**Factory value**	**Data Type**	**Accessibility**	**Data Range**
				Uint16	R/W/S	0~65535
sub-index	00	External input polarity configuration	0	Description: This parameter sets the polarity of the external input level, 0: positive logic (default low level); 1: anti-logic Bit0: corresponds to the drive's external input 1 IN1 Bit1: corresponds to the external 1 input IN2 of the drive Bit2: corresponds to the external 1 input IN3 of the drive Bit3: corresponds to input IN4 of the external 1 of the drive		

Index 60FDh	Name	Object Structure	Data Type	Accessibility	Related Models	PDO Mapping	Data Range	Factory value
	External input function status	VAR	Uint32	R	-	YES	2^{32}-1	-

Subindex: 00
Description: Defined by bit, it can be used to indicate the level status of the external input function, 1 means the signal is triggered, 0 means not triggered.
bit0: The current state of the negative limit
bit1: The current state of the positive limit
bit2: The current state of the origin signal

bit16: The current status of the fast stop signal (Note: the DMA882-CAN has 4 inputs to have this signal)
Bit17~bit21 corresponds to the input level of IN1~IN5 custom function

Index 2155h	Name	Object Structure	Data Type	Accessibility	Related Models	PDO Mapping	Data Range	Factory value
	External input pin status	VAR	Uint16	R	-	YES	0~32768	-

Subindex: 00
Description: defined by bit, corresponding to the level status of the external input pins in turn, 1 means the signal is triggered, 0 means not triggered.
bit0: corresponds to the current state of external IN1
bit1: corresponds to the current state of external IN2
bit2: corresponds to the current state of external IN3
Bit3: corresponds to the current state of external IN4 (Note: the DMA882-CAN has 4 inputs to have this signal)

2) Input status indication

3) Output settings

Index 2005h		Definition	Factory value	Data Type	Accessibility	Data Range
				Uint16	R/W/S	0~32768
sub-index	01	External output port 1 function setting	1	Description: This parameter sets the function of the external output. Bit0: Alarm output Bit2: In-place output Bit4: Master control output, when this state is set, the master controls the state of the output port for 60FE operation. The definition of 60FE is explained below		
	02	External output port 2 function setting	4			

Index 2008h		Definition	Factory value	Data Type	Accessibility	Data Range
				Uint16	R/W/S	0~65535
sub-index	00	External output port resistance state setting	0	Description: This parameter sets the external output configuration, 0: positive logic; 1: anti-logic Bit0: corresponds to the drive external input port 1 Bit1: corresponds to the drive external input port 2		

Index 60FEh		Definition	Factory value	Data Type	Accessibility	Data Range
				Uint32	R/W	2^{32}-1
sub-index	01	External output port output	0	Note: This parameter is only valid when function Bit4 of 2005+01/02 is set to 1, and is used to set the external output on. Bit16: corresponds to the external output port out1. Bit17: corresponds to the external output port out2. Other undefined bits are reserved.		
	02	External output port enable	0	Description: This parameter is only valid when function Bit4 of 2005+01/02 is set to 1, and is used to set the enable of external output. Bit16: corresponds to the external output port out1. Bit17: corresponds to the external output port out2. Other undefined bits are reserved.		

3.5.4 Rotation direction setting

Index 2051		Definition	Factory value	Data Type	Accessibility	Data Range
				Uint32	R/W	2^{32}-1
sub-index	00	Motor rotation direction setting	0	Description: This parameter sets the initial rotation direction of the motor 0: in the same direction as the command. 1: opposite direction to the command.		

3.5.5 Stop setting

Index 6084h		Definition	Factory value	Data Type	Accessibility	Data Range
				Uint32	R/W	2^{32}-1
sub-index	00	Deceleration	0	Description: This parameter is the deceleration speed in position/velocity mode When the setting is not 0, the motor decelerates and stops according to this deceleration speed when the motor is triggered to decelerate. This parameter cannot be set to 0. When set to 0, the motor cannot be decelerated to stop.		
Index 6085h		Definition	Factory value	Data Type	Accessibility	Data Range
				Uint32	R/W	2^{32}-1
sub-index	00	Motor emergency stop speed reduction	0	Description: This parameter sets the motor emergency stop deceleration speed When the setting is not 0, the motor decelerates and stops according to this deceleration speed when the emergency stop is triggered. When set to 0, it means the motor stops immediately.		
The motor can be stopped in several ways. 1: motor from running to non-enabled state, motor free stop (motor has no current, stops with motor inertia). 2: non-specified conditions of the trigger limit switch, the motor will be an emergency stop. 3 : Stop in different modes according to the deceleration speed of the corresponding mode, refer to the relevant settings in the relevant mode.						

3.5.6 Other function settings

1) Electronic gearing / pulses per revolution

Index 2001h		Definition	Factory value	Data Type	Accessibility	Data Range
				Uint16	R/W/S	6400~51200
sub-index	00	Motor pulses per revolution Number of instructions per revolution	50000	This parameter sets the number of commands required to select one revolution of the motor. The default value is 50000.		

2) Parameter save/restore factory values

Index 1010h		Definition	Factory value	Data Type	Accessibility	Data Range
				Uint32	R/W	$0\sim2-1^{32}$
sub-index	01	Save all parameters	0	Save all parameters, as EM-CAN only supports the saving of vendor parameters, so perform the saving of this object, same function as 1010h-04, write 0x65766173		
	02	Save communication parameters	0	Invalid		
	03	Save application parameters (402 part)	0	Invalid		
	04	Save manufacturer parameters	0	Save parameters, write 0x65766173		
Index 1011h		Definition	Factory value	Data Type	Accessibility	Data Range
				Uint32	R/W	$0\sim2-1^{32}$
sub-index	01	Restore all parameters	0	Restore all parameters to factory settings, write 0x64616f6c		
	02	Save communication parameters	0	Invalid		
	03	Recovery of application parameters (part 402)	0	Invalid		
	04	Recovery of manufacturer parameters	0	Restore vendor parameters to factory settings, write 0x64616f6c		

4 Operation Modes of EM-CAN

4.1 Motor Enable Control

Example - How to enable

This section describes how to enable the motor axes controlled by the EM-CAN driver using the Control Word (6040h)/Status Word (6041h) command toggle/status judgment.

The steps are as follows.

Step 1: Write 0 (decimal) to control word 6040h, then press the bit with 0x200 whether equal to 0x200

Step 2: Write 6 (decimal) to control word 6040h, then press the bit with 30x21 whether it is equal to 0x231

Step 3: Write 7 (decimal) to control word 6040h, then press the bit with 0x233 whether it is equal to 0x233 ***1)**

Step 4: Write 15 (decimal) to control word 6040h, then press the bit with 0x273 whether it is equal to 0x237

The pseudo code is as follows.

```
IF (if) 6041h & (bit with) 0x23F is equal to 0x218          //judge focus on whether bit 3 is equal to 1
{
    The driver is reporting an error and error handling is required
}
ElSE                                                    // No error reported
{
    IF ENABLE is TRUE                                   //ENABLE is the enable trigger signal from the master
    {
        CASE(index)                                     //index is used to switch the enable step, default is 0
        {
            0.
                6040h write 0;
                For Index write 1;
            1:
                IF (if) 6041h & (bit with) 0x200 is equal to 0x20 0  //judge focus on whether bit 0 is equal
to 0
                    6040h write 6;
                    For Index write 2;
                ENDIF
            2:
                IF 6041h &(bit with) 0x213 is equal to 0x21 3       //judge focus on whether bit 0 is equal
to 1
                    6040h write 7;
    For Index write 3;
    ENDIF
            3:
    IF 6041h &(bit with) 0x233 is equal to 0x233        //judge focus on whether bits 0 and 1 are equal to 1
*1)
    6040h write 15(0xF);
    For Index write 4;
    ENDIF
            4:
    IF 6041h &(bit with) 0x273 is equal to 0x27 3       //judge focus on whether bits 0, 1 and 2 are equal to 1,
enable complete
            ENABLE_OK write TRUE;               //enable completion flag output
    ENDIF
    }
    }
    ELSE                                                //ENABLE is false, not enabled
    {
                6040h write 0;
                Write 0 to Index;                           // clear the jump amount for the next enable
                ENABLE_OK writes FALSE;
```

```
    }
}
```

Caution:

(1) In general, the motor is not enabled by default after power-up, so the motor needs to be enabled and controlled first.

(2) Before carrying out enabling control, please ensure that the current value of the drive is set reasonably and saved to avoid excessive heating of the motor or motor burnout due to excessive rated current setting, especially when matching small current motors, please pay extra attention.

This chapter mainly introduced CANopen operation mode which is supported by Leadshine.

4.2 Profile Position Mode

4.2.1 Motion Settings

☆Set the operating mode (6060H) to be Profile position mode (value is 1).

☆Set motion target position to Profile position (607AH) (unit: pulse).

☆Set maximum motion speed to Profile speed (6081H) (unit: pulse/s).

☆Set motion acceleration to Profile acceleration (6083H) (Unit: pulse/s^2).

☆Set motion deceleration to Profile deceleration (6084H) (Unit: pulse/s^2).

☆Set the control word(6040H) to the corresponding values in order to change the device control state machine and perform movement.

Remark: Control word(6040H) operation and change process under various operating mode can refer to appendix A.

4.3.2 Query Setting

▲ Can set query status word(6041H) to get motion status.

▲ Can set query position feedback to observe real-time position information of movements

▲ Can set the query speed feedback(606CH) to get the real-time speed.

4.3 Profile Velocity Mode

4.3.1 Motion Settings

☆Set the operating mode (6060H) to be Profile Velocity mode (value is 3).

☆Set motion target speed to Profile speed (60FFH) (unit: pulse/s).

☆Set motion acceleration to Profile acceleration (6083H) (Unit: pulse/s^2).

☆Set motion deceleration to Profile deceleration (6084H) (Unit: pulse/s^2).

☆Set the control word(6040H) to the corresponding values in order to change the device control state machine and perform movement.

Remark: Control word(6040H) operation and change process under various operating mode can refer to appendix A.

4.3.2 Query Settings

▲ Can set query status word(6041H) to get motion status.

▲ Can set the query speed feedback(606CH) to get the real-time speed.

4.4 Home Mode

4.4.1 Motion Settings

☆Set the operating mode (6060H) to be Profile Velocity mode (value is 6).

☆ Set the homing method(6098H).EM556-CAN is open loop drive, support partial Cia402 homing method (6098H can be set to 17-30).

☆Respectively set back to the Home with high speed [6099H(0x1)] and back to the Home with low speed [6099H(0x2)](Unit: pulse/s).

☆Set back to the Home acceleration/deceleration (609AH) (Unit: pulse/s^2).

☆Set the Home offset (607CH) (Unit: pulse).

☆Set the control word(6040H) to the corresponding values in order to change the device control state machine and perform movement.

Remark: Control word(6040H) operation and change process under various operating mode can refer to appendix A.

4.4.2 Query Settings

▲ Can set query status word(6041H) to get motion status.

Appendix A

Control word(6040H) switchover under various operating modes:

Control word (6040H) definition under Profile position mode(operating mode 6060H is 1):

Byte	15:9	8	7	6	5	4	3	2	1	0
Definition	Null	Stop	Error reset	Absolute/relative position	Effective immediately	New set point	Enable	Quick stop	Voltage output	Start

Control word(6040H) changing process under relative position:

0x06 ⟷	0x07 ⟷	0x0F ⟷	0x4F ⟷	0x5F
Voltage output + Quick stop	+ Start	+ Enable	+ Relative position	+ New set point

Control word(6040H) changing process under absolute position:

0x06 ⟷	0x07 ⟷	0x0F ⟷	0x1F
Voltage output + Quick stop	+ Start	+ Enable (default absolute position)	+ New set point

Take relative position for example:

When fifth digit of control word(6040H) is zero(Single point setting), the new position of the set point is not effective immediately in the process of movement. Instead, after finish current motion, A just can starts the next movement through the new control command((6040H) fourth digit change from 0 to 1). Its motion process as diagram below:

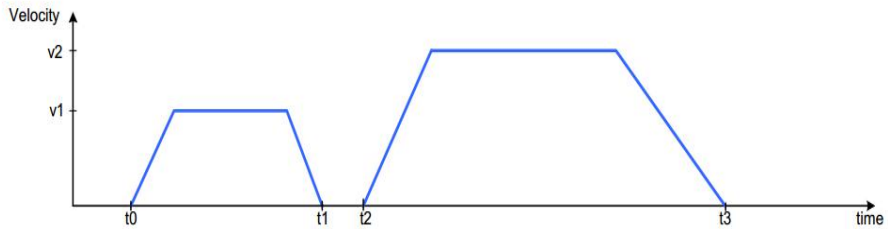

If after the new motion information input, the new set point effective immediately(multiple-point setting) when the fifth digit of control ward(6040H) is 1 . The new information will be superimposed on the current information, start perform motion according to new motion information. Its motion process as diagram below:

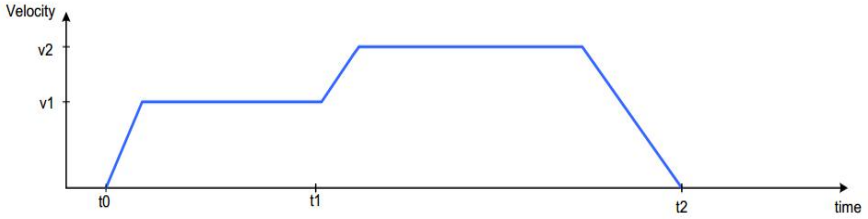

The current motion not over yet, new motion information sent to the drive, the fourth digit of control ward(6040H) change from 0 to 1 to start a multipoint motion.

Remark: PP motion of absolute position perform similar processing.

Control word(6040H) data bits' definition under Profile Velocity mode(operation mode 6060H is 3)

Bit	15:9	8	7	6:4	3	2	1	0
Definition	Null	Stop	Error reset	Null	Enable	Quick stop	Voltage output	Start

Control word(6040H) changing process under Profile Velocity mode. (Falling edge of the eighth digit execute)

0x06 ⟷	0x07 ⟷	0x0F ⟷	0x10F ⟷	0x00F
Voltage output + Quick stop	+ Start	+ Enable	+ Stop	execute

Control word(6040H) data bits' definition under Home mode(operation mode 6060H is 6):

Digit	15:9	8	7	6:5	4	3	2	1	0
Definition	Null	Stop	Error reset	Null	Home point movement began	Enable	Quick stop	Voltage output	Start

Control word(6040H) changing process under Home point mode:

0x06 ⟷	0x07 ⟷	0x0F ⟷	0x1F ⟷	0x0F
Voltage output + Quick stop	+ Start	+ Enable	+ Home point movement began	suspend

Remark: Security concerns, after power on, the first time to start the Home movement need to perform twice control word switchover from (6040H)0x0F to 0x1F.

In the process of movement, control word(6040H) write into 0x02 will perform emergency stop operation.

When drive(slave station) in the status of fault, can transmit error reset control word(6040H) to convert to cancel the startup states:

0x80
Cancel start

Appendix B

PDO Transmission type definition table

transmission code	PDO transmission mode				
	cyclic	acyclic	synchronous	asynchronous	remote frame
0		√	√		
1-240	√		√		
241-251	reserved				
252			√		√
253				√	√
254				√	
255				√	

Transmission code 1-240 represent synchronization information quantity between 2 PDO transmission.
Transmission code 252 represent update the data immediately after receive SYNC information.
Transmission code 253 represent update the data immediately after receive RTR information.
Transmission code 254 unsupported.
Transmission code 255 represent asynchronous transmission.

Appendix C

Emergency error code table

Emergency error code	Code function description
0000H	No Error
8110H	CAN overflow
8120H	Error passive mode
8130H	Lifetime protect/heartbeat errors
8140H	Forced offline to recover fault
8141H	Forced offline
8150H	Transmit COB-ID conflict
8210H	PDO length error undisposed
8220H	PDO over length

Appendix D

SDO suspend transmit code table

Suspend code	Code function description
0503 0000H	Trigger byte does not alternating change
0504 0000H	SDO Profile timeout
0504 0001H	Illegal/unknown command word
0504 0002H	Invalid block size (only block transmission mode)
0504 0003H	Invalid serial number (only block transmission mode)
0504 0004H	CRC error (only block transmission mode)
0504 0005H	memory overflow
0601 0000H	Object does not support access
0601 0001H	Try to read write-only object
0601 0002H	Try to write a read-only object
0602 0000H	Object not exist
0604 0041H	Object cannot map to PDO
0604 0042H	Number and length of mapped object beyond PDO length
0604 0043H	General parameters incompatible
0604 0047H	General device internal incompatible
0606 0000H	Hardware error lead to object access failure
0606 0010H	Data type mismatch, service parameters length mismatch
0606 0012H	Data type mismatch, service parameters length is too long
0606 0013H	Data type mismatch, service parameters length is too short
0609 0011H	Sub-index does not exist
0609 0030H	Beyond the value range of the parameter (During write access)
0609 0031H	Write in parameter value is too big
0609 0032H	Write in parameter value is too small
0609 0036H	The maximum value is less than the minimum value
0800 0000H	General Error
0800 0020H	Data can not transmit or saved to the application
0800 0021H	Data can not transmitted or saved to the application due to the local control
0800 0022H	Data can not transmitted or saved to the application due to current device status
0800 0023H	Object dictionary dynamic errors or object dictionary does not exist (For example, generate the object dictionary by files, but the file damage caused the error)

EM556-CAN
CANopen Stepper Drive
User Manual

Revision 1.0

Address: 15-20/F, Block B, Nanshan I Valley, No.3185, Shahe West Road, Nanshan District, Shenzhen, Guangdong, 518055, China

Tel: (86)755-26409254 ***Fax:*** (86)755-26402718

Web: www.leadshine.com ***Sales:*** sales@leadshine.com

Support: tech@leadshine.com

Notice

Read this manual carefully before any assembling and using. Incorrect handling of products in this manual can result in injury and damage to persons and machinery. Strictly adhere to the technical information regarding installation requirements.

Record of Revisions

Revision	Date	Description of Release
1.0	*Mar, 2017*	*Initial Release*

Preface

Thank you for you choose EM556-CAN stepper drive system of Leadshine Technology Co,.Ltd. This manual gives required knowledge & precautions for using EM556-CAN.

Improper operation may cause an accident, please read this manual carefully before operation.

- Manual content may change due to product improvement, please forgive without prior notice.
- Leadshine will not undertake any responsibility in case of user's unauthorized product changes, product warranty will be invalid.

Please pay attention to the following reminders:

CAUTION

- Only the technical personnel to install,debug or maintain the product.
- To ensure correct wiring before power-on test.
- Incorrect voltage or power polar can cause damage to drive or other accidents

Table of Contents

1. Introduction

1.1 Overview

EM556-CAN is one of the new high performance stepper drive which can support CANopen communication protocol. By implementing latest 32-bit DSP technology, this stepper drive is able to power 2 phase and 4 phase stepper motors. It can configure drive parameters and motor operation in real time via CANopen commander. Especially in multi-axis linkage of applications, can greatly reduce the wiring, enhance the drive running reliability.

1.2 Features

- Power supply 20-50VDC
- Output current 0.5-5.6A
- Support CAN field bus control, meet CANopen standard protocol of DS301 V4.02 and DSP 402 V2.01
- Setting address and the baud rate via DIP switch
- Operates in velocity, position or home mode
- 3 digital inputs and 1 digital output for EM556-CAN, 5-24VDC
- Protections for over-voltage and over-current,etc.

1.3 Application

Suitable for all kinds of multi-axis linkage control of small and medium-sized automation equipment and instrumentation: such as manipulator, packaging machinery etc.

2. Specification

2.1 Electrical Specification

Parameters	EM556-CAN			
	Min	Typical	Max	Unit
Output Current	0.1	-	5.6 (4.0 RMS)	A
Supply Voltage	20	24 - 48	50	VDC
Input signal current	6	10	16	mA
Input signal voltage	5	-	24	VDC
Over voltage Value	-	90	-	VDC
Isolation resistance	500			MΩ

2.2 Environment

Cooling	Natural Cooling or Forced cooling	
Operating Environment	Environment	Avoid dust, oil fog and corrosive gases
	Ambient Temperature	0°C — 65°C (32°F - 149°F)
	Humidity	40%RH—90%RH
	Operating Temperature	0°C — 50°C (32°F - 122°F)
	Vibration	10-50Hz / 0.15mm
Storage Temperature	-20°C — 65°C (-4°F - 149°F)	
Weight	Approx. 227g (8 oz)	

2.3 Mechanical Specification

(unit: mm [1inch=25.4mm])

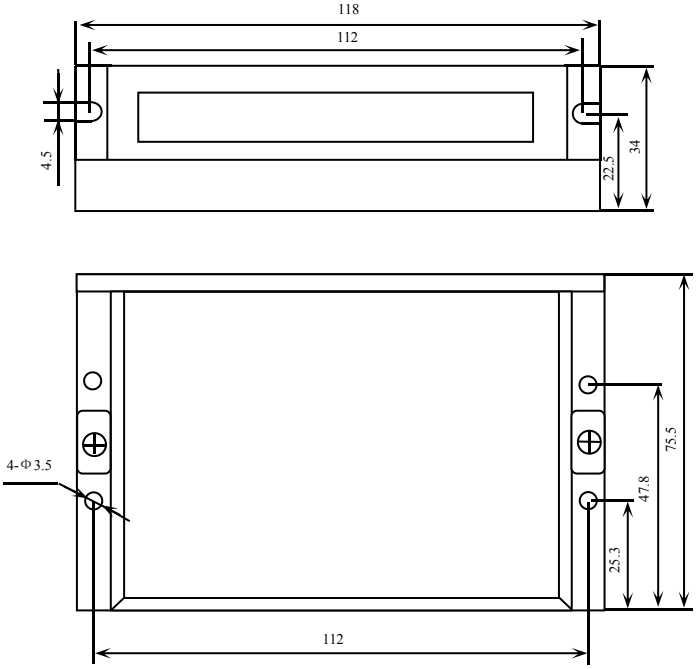

Figure 1: Mechanical specifications

*** Side mounting recommended for better heat dissipation**

2.4 Elimination of Heating

- EM556-CAN reliable working temperature should be < 60℃ (140°F) and stepper motor should be <120℃ (248°F)
- It is recommended to use automatic idle-current mode to reduce drive and motor heating. That means output current will be reduce to 50% when the motor at standstill.
- It is recommended to mount the drive vertically to maximize heat sink area. Use forced cooling method to cool if necessary.

3. Connection Pin Assignment & DIP Switch & LED Indication

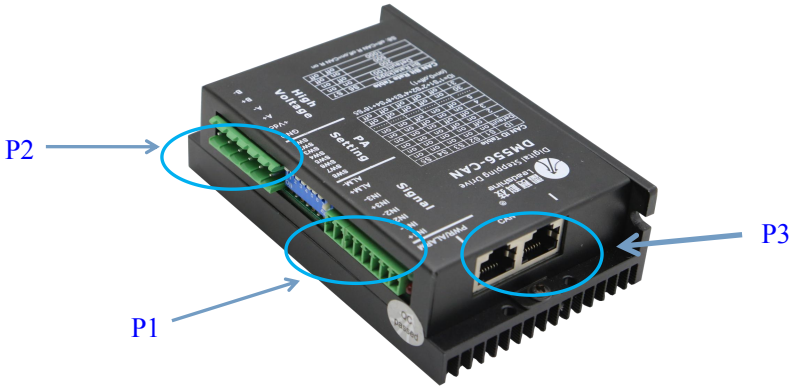

The EM556-CAN has three connector blocks P1&P2&P3 (see above picture). P1 is for IO signals connections, P2 is for power and motor connections, and P3 is for CAN communication connection. The following tables are brief descriptions of the two connectors. More detailed descriptions of the pins and related issues are presented in section 4, 5, 9.

3.1 Connection Pin Assignment

3.1.1 Connector P1

Pin Function	Details

IN1+	Opto-isolation differential input signals (5-24V compatible)
IN1-	
IN2+	
IN2-	
IN3+	
IN3-	
ALM+	Opto-isolation differential output signal is for alarm function. maximum output current 100mA, maximum pull-up voltage 24VDC
ALM-	

Notes: (1) The function of input signals can be configured by controller

3.1.2 Connector P2

Pin Function	Details
GND	Power supply ground connection.
+VDC	Power supply positive connection. Suggest 24-48VDC power supply voltage
A+, A-	Motor Phase A connections. Connect motor A+ wire to A+ Pin; motor A- wire to A-
B+, B-	Motor Phase B connections. Connect motor B+ wire to B+ Pin; motor B- wire to B-

Warning: (1) Don't plug or unplug the P2 terminal block to avoid drive damage or injury when EM556-CAN is powered on; (2) Don't connect the power supplier to motor connection terminal, and don't connect +VDC and GND inversely, otherwise, drive will be damaged.

3.1.3 Connector P3

CAN port of EM556-CAN adopt shield doublet RJ45 terminal (standard RJ45 specification).

PIN definition	PIN	Signal	Details
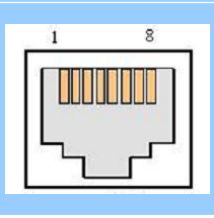	1	CAN_H	Differential signal of CAN
	2	CAN_L	
	3	CAN_GND	CAN ground
	4-8	NC	-

Notes: (1) shielding cable and reliable grounding is suggested; (2) CAN_H and CAN_L should not connect inversely; (3) Two interfaces of RJ45 without order.

3.2 DIP Switch

EM556-CAN field bus stepper drive uses an 8-bit DIP switch to set CAN ID, baud rate, as shown below:

3.2.1 CAN ID Setup

Low 5 bits of CAN ID are set by DIP switch SW1-SW5, and high 5 bits of CAN ID are set by controller, as shown in the following table.

CAN address ID(low 5 bits)	SW1	SW2	SW3	SW4	SW5
1	off	on	on	on	on
2	on	off	on	on	on
3	off	off	on	on	on
4	on	on	off	on	on
5	off	on	off	on	on
6	on	off	off	on	on
7	off	off	off	on	on
8	on	on	on	off	on
9	off	on	on	off	on
10	on	off	on	off	on
11	off	off	on	off	on
12	on	on	off	off	on
13	off	on	off	off	on
14	on	off	off	off	on
15	off	off	off	off	on
16	on	on	on	on	off
17	off	on	on	on	off
18	on	off	on	on	off
19	off	off	on	on	off
20	on	on	off	on	off
21	off	on	off	on	off
22	on	off	off	on	off
23	off	off	off	on	off
24	on	on	on	off	off
25	off	on	on	off	off
26	on	off	on	off	off
27	off	off	on	off	off
28	on	on	off	off	off
29	off	on	off	off	off
30	on	off	off	off	off
31	off	off	off	off	off

Notice **Notes:** (1) SW1-SW5 set to "on" all will be invalid ID; (2) Should restart the power after modifying CAN ID.

3.2.2 CAN Baud Rate Setup

CAN baud rate can be set by DIP switch SW6-SW8, as shown below:

Baud rate(Kbps)	SW6	SW7	SW8
20	on	on	on
50	off	on	on
100	on	off	on
125	off	off	on
250	on	on	off
500	off	on	off
1000	on	off	off

Notes: (1) Should restart the power after modifying baud rate.

3.3 LED Light Indication

There are two LED lights for DM56-CAN. The GREEN one is the power indicator which will be always on generally. The RED one is a protection indicator which will flash 1-2 times in a 3-second period, when protection enabled for a EM556-CAN. Different number of flashes indicates different protection type ,as shown following table.

Priority	Time(s) of Blink	Sequence wave of red LED	Description
1st	1	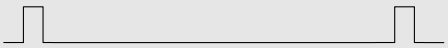	Over-current protection activated when peak current exceeds the limit.
2nd	2	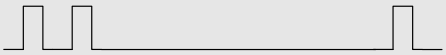	Over-voltage protection activated when drive working voltage is greater than 90VDC
3rd	8		EEPROM Fault(need to configure parameter)
4th	12		Operational Amplifier Fault (need to configure parameter)

Notes: (1) The protections for detecting.fault of EEPROM fault and Operational Amplifier need to turn on manually via configuring parameter, read section 4.4 for detail; (2) When one of the protection is active, the motor shaft will be free and the red LED blinks. Restart the power to make it function properly after removing above problems.

4. Getting Started

4.1 Wiring Instruction

4.1.1 Power supply & motor cable

- Wire diameter: +VDC, GND, A+, A-, B+, B- terminal wire diameter≥0.3mm^2 (AWG15-22)

- Recommend to connect a noise filter between power supply and drive, can improve anti-interference performance.

4.1.2 I/O signal cable

- Wire diameter: IN1+, IN1-, IN2+, IN2-, IN3+, IN3- terminal wire diameter≥0.12mm^2 (AWG24-26)
- Recommended to adopt shielded twisted pair cable, cable length as short as possible, suggest no more than 3 meters
- Wiring: As far as possible away from the power line wiring, in order to prevent interference
- Please connect surge absorber to inductive device, such as anti-parallel diode for DC coil, parallel RC-snubbers circuit for AC coil.

4.1.3 CAN communication cable

There are coupling relationship between CAN bus cable length, guide line cross sectional area, terminal resistance and communication rate, recommended combinations as below:

Length (m)	Bus cable		Terminal resistance (Ω)	Communication rate
	Resistance per unit length(mΩ/m)	Cross-sectional area(mm²)		
0-40	70	0.25-0.34	120	1 Mbit/s
40-300	<60	0.34-0.6	150-300	<500 Kbit/s
300-600	<40	0.7-0.75	150-300	<100 Kbit/s
600-1000	<26	0.75-0.8	150-300	<50 Kbit/s

Notice **Notes:** (1) shielding and twisted-pair cable is suggested.

4.1.4 Terminal resistance

Note	Terminal resistance
It must to connect an 120Ω resistance if the drive on the end of bus, and customer need to order the terminal resistance as shown right	

4.2 Typical Connection

EM556-CAN adopt CANopen protocol, typical schematic wiring topology structure as below

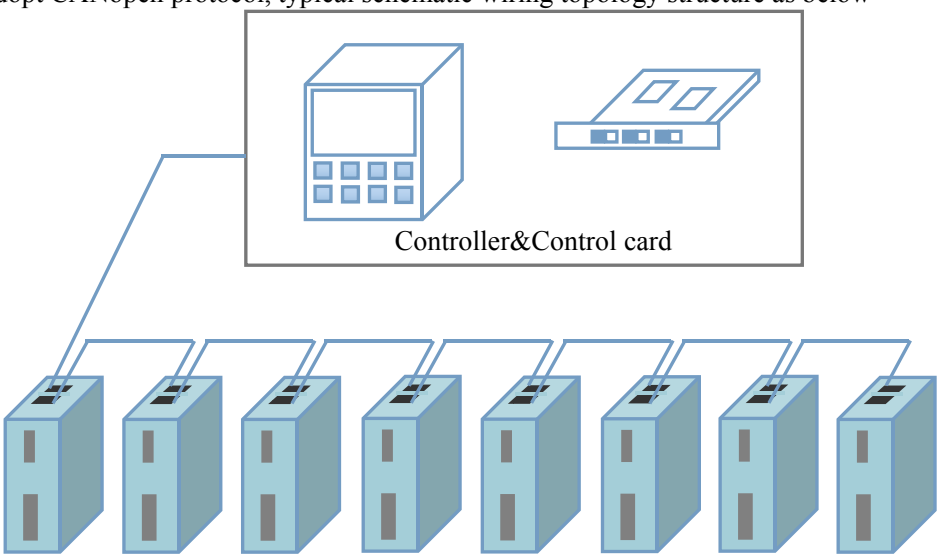

Figure 2: The topology of the CAN network

Each EM556-CAN of the CAN network wiring diagram:

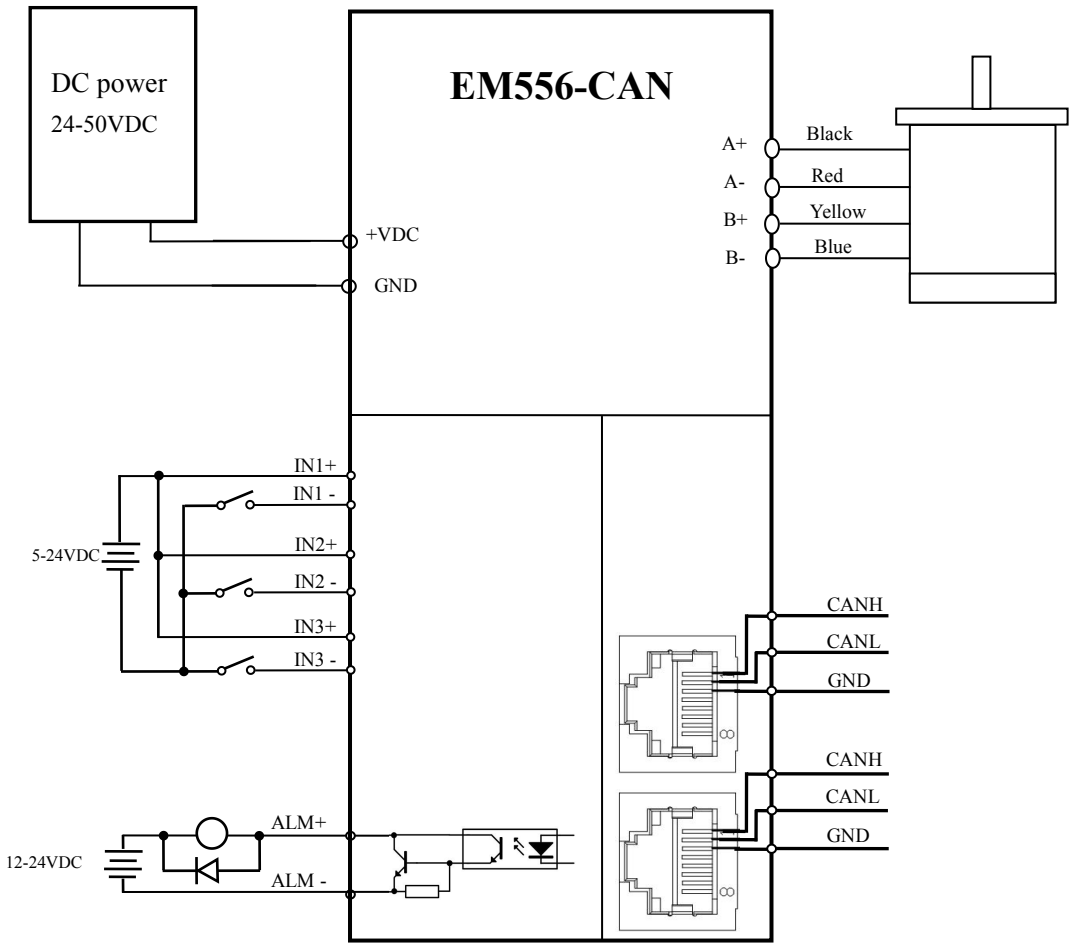

Figure 3: The wiring diagram of each EM556-CAN

Notes: (1) The EM556-CAN at the end of the network need to plug a terminal resistance in any one of the P3 interface(RJ45); (2) In order to avoid bad insulation performance as heating, cable and wire should be fixed well and keep away from motors and drives.

4.3 Motor Connection

The EM556-CAN can drive 2-phase and 4-pahse bipolar hybrid stepper motors with 4, 6, or 8 wires (frame size from NEMA17 to 24).

4.3.1 Connections of 4-lead Motor

The 4 lead motors are the least flexible and easy to connect. And the Speed – torque of motor depends on winding inductance. The output current from drive that is multiply the specified phase current by 1.4 to determine the peak output current.

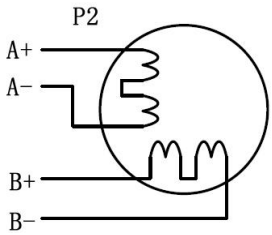

Figure 4: 4-lead Motor Connections

4.3.2 Connections of 6-lead Motor

Like 8 lead stepping motors, 6 lead motors have two configurations available for high speed or high torque operations. The higher speed configuration, or half coil, is described, because it uses one half of the motor's inductor windings. The higher torque configuration, or full coil, uses the full coil windings.

(1) Half Coil Configuration

As previously stated, the half coil configuration uses 50% of the motor phase windings. This gives lower inductance, hence, lower torque output. Like the parallel connection of 8 lead motor, the torque output will be more stable at higher speeds. This configuration is also referred to as half chopper. In setting the drive output current multiply the specified per phase (or unipolar) current rating by 1.4 to determine the peak output current.

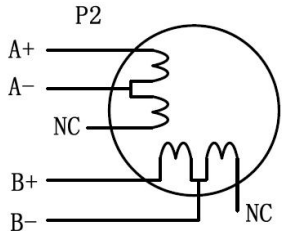

Figure 5: 6-lead motor half coil (higher speed) connections

(2) Full Coil Configuration

The full coil configuration on a six lead motor should be used in applications where higher torque at lower speed is desired. This configuration is also referred to as full copper. In full coil mode, the motors should be run at only 70% of their rated current to prevent overheating.

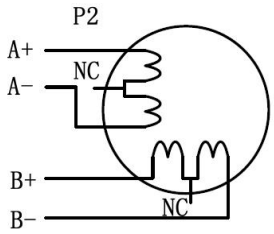

Figure 6: 6-lead motor full coil (higher torque) connections

4.3.3 Connections of 8-lead Motor

8 lead motors offer a high degree of flexibility to the system designer in that they may be connected in series or parallel, thus satisfying a wide range of applications.

(1) Series Connection

A series motor configuration would typically be used in applications where a higher torque at lower speed is required. Because this configuration has the most inductance, the performance will start to degrade at higher speed. In series mode, the motors should also be run at only 70% of their rated current to prevent overheating.

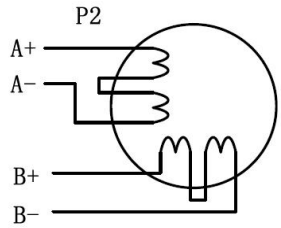

Figure 7: 8-lead motor series connections

(2) Parallel Connection

An 8 lead motor in a parallel configuration offers a more stable, but lower torque at lower speeds. But because of the lower inductance, there will be higher torque at higher speeds. Multiply the phase (or unipolar) current rating by 1.96, or the bipolar current rating by 1.4, to determine the peak output current.

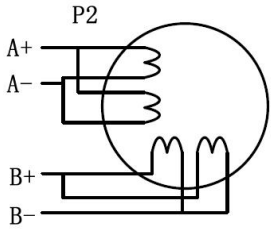

Figure 8: 8-lead motor parallel connections

4.4 Power Supply Selection

The EM556-CAN can power medium and small size stepping motors (frame size from NEMA17 to 24) made by Leadshine or other motor manufacturers. To get good driving performances, it is important to select supply voltage and output current properly. Generally speaking, supply voltage determines the high speed performance of the motor, while output current determines the output torque of the driven motor (particularly at lower speed). Higher supply voltage will allow higher motor speed to be achieved, at the price of more noise and heating. If the motion speed requirement is low, it's better to use lower supply voltage to decrease noise, heating and improve reliability.

4.4.1 Regulated or Unregulated Power Supply

Both regulated and unregulated power supplies can be used to supply the drive. However, unregulated power supplies are preferred due to their ability to withstand current surge and fast response for current change. If you prefer to a regulated power supply, it is suggested to choose such a power supply specially designed for stepper/servo controls such as Leadshine RPS series (http://www.leadshine.com/producttypes.aspx?producttype=regulated-switching). Or, in the case when only normal switching power supplies are available, it is important to use "OVERSIZE" high current output rating power supplies (for example, using a 4A power supply for 3A stepper motor) to avoid problems such as current clamp. On the other hand, if unregulated supply is used, one may use a power supply of lower current rating than that of motor (typically 50%-70% of motor current). The reason is that the drive draws current from the power supply capacitor of the unregulated supply only during the ON duration of the PWM cycle, but not during the OFF duration. Therefore, the average current withdrawn from power supply is considerably less than motor current. For example, two 3A motors can be well supplied by one power supply of 4A rating.

4.4.2 Power Supply Sharing

Multiple EM556-CAN drives can share one power supply to reduce cost, if that power supply has enough power capacity. To avoid cross interference, connect each stepper drive directly to the shared power supply separately. To avoid cross interference, DO NOT daisy-chain connect the power supply input pins of the Drivers. Instead connect them to power supply separately.

4.4.3 Selecting Supply Voltage

The EM556-CAN is designed to operate within +20 - +50VDC voltage input. When selecting a power supply, besides voltage from the power supply power line voltage fluctuation and back EMF voltage generated during motor deceleration needs also to be taken into account. Ideally it is suggested to use a power supply with the output range of +24 - +48 VDC, leaving room for power line voltage fluctuation and back-EMF.

Higher supply voltage can increase motor torque at higher speeds, thus helpful for avoiding losing steps. However, higher voltage may cause bigger motor vibration at lower speed, and it may also cause over-voltage protection or even drive damage.

Therefore, it is suggested to choose only sufficiently high supply voltage for intended applications.

4.5 Object Dictionary Introduction

Object Dictionary is an organized group of objects, which maps the stepper drive related parameters and variables. Parameters of EM556-CAN can be configured via CAN to USB adaptor and Leadshine CANopen software or PLC & controller & control card, use SDO communication mode to modify the drive parameters. Corresponding ESD file and Leadshine CANopen software can be free download in Leashine official website: http://www.leadshine.com.

4.5.1 Common list objects

(1)Factory parameters

CANopen Address	Parameter Name	Property	Default Value	Range	Description
2000+00	Peak current	R/W/S	3200	100-maximum current	Current Accuracy 100mA, maximum current is due to peak current output of drive (mA).
2001+00	Motor resolution	R/W/S	50000	200-51200	Required pulse for each rotation circle of motor
2002+00	Stand-by time	R/W/S	500	100-10000	unit: ms
2003+00	Standby current percentage	R/W/S	50	0-100	unit: %
2005+01	Digital output IO function Selection	R/W/S	1	0-32768	1: Alarm output 4: Arrive output 16: Master station controls the output port(set by 60FEH)
2008+00	ALM output impedance setting	R/W/S	0	0/1	0: Optocoupler conduction when alarm activated 1: Optocoupler shut off when alarm activated
2013+00	Enable current loop auto-tuning	R/W/S	1	0/1	0:Enable 1:Disable
2015+00	Current loop Kp	R/W/S	1000	200-32767	Only can be read when enable auto-tuning, can be wrote when disable auto-tuning
2016+00	Current loop Ki	R/W/S	200	0-32767	Only can be read when enable auto-tuning, can be wrote when disable auto-tuning
2020+00	Motor resistance	R/W/S	1000	1-20000	Unit: mOhms
2021+00	Motor inductance	R/W/S	1	1-6000	Unit: uH
2039+00	External position amount high 16 bit	R			Received location instruction accumulated value high 16bit
2040+00	External position amount low 16 bit	R/W			Received location instruction accumulated value low 16bit
2043+00	Speed reference	R			Unit: r/s
2051+00	Motor running direction	R/W/S	0	0/1	0:Motor running direction is constant

					1:Motor running direction reverse
2056+00	Alarm detection selection (this parameter Enable over-current and over-voltage by default)	R/W/S	0x03	0-0xffff	Alarm detection selection: 1:Enable.0:Disable bit0: Over-current (error code:1, red LED flashes 1 time) bit1:Over-voltage (error code:2, red LED flashes 2 times) bit2:EEPROM (error code:8, red LED flashes 8 times) bit11: Operational amplifier fault (error code:9, red LED flash 12 times)
2060+00	First anti-vibration amplitude values	R/W/S	0	0-100	First low speed resonance point inhibition amplitude values
2061+00	First anti-vibration phase A	R/W/S	0	0-255	First low speed resonance point inhibition phase A
2062+00	First anti-vibration phase B	R/W/S	0	0-255	First low speed resonance point inhibition phase B
2063+00	Second anti-vibration amplitude values	R/W/S	0	0-100	Second low speed resonance point inhibition amplitude values
2064+00	Second anti-vibration phase A	R/W/S	0	0-255	Second low speed resonance point inhibition phase A
2065+00	Second anti-vibration phase B	R/W/S	0	0-255	Second low speed resonance point inhibition phase B
2066+00	Third anti-vibration amplitude values	R/W/S	0	0-100	Third low speed resonance point inhibition amplitude values
2067+00	Third anti-vibration phase A	R/W/S	0	0-255	Third low speed resonance point inhibition phase A
2068+00	Third anti-vibration phase B	R/W/S	0	0-255	Third low speed resonance point inhibition phase B
2069+00	Fourth anti-vibration amplitude values	R/W/S	0	0-100	Fourth low speed resonance point inhibition amplitude values
2070+00	Fourth anti-vibration phase A	R/W/S	0	0-255	Fourth low speed resonance point inhibition phase A
2071+00	Fourth anti-vibration phase B	R/W/S	0	0-255	Fourth low speed resonance point inhibition phase B
2072+00	Z axis anti-vibration phase	R/W/S	0	0-255	Z axis low speed resonance point inhibition phase

2073+00	Motor auto-running when power on	R/W/S	0	0/1	0: Motor normal standby when power on 1: Motor turns 30°and reverse 30 when power on, then standby
2150+00	CAN ID high 2 bit	R/W/S	0	0-3	Slave station address: Activate after repower
2151+00	CANopen baud rate	R/W/S	0	0-7	0:1000kBit/sec 1:Invalid 2:500 kBit/sec 3:250 kBit/sec 4:125 kBit/sec 5:100 kBit/sec 6:50 kBit/sec 7:20 kBit/sec
2152+01	Digital input IN1 function selection	R/W/S	1	0-32768	1:Home signal 2:Positive limit 4:Negative limit 32768:Emergency stop
2152+02	Digital input IN2 function selection	R/W/S	2	0-32768	1:Home signal 2:Positive limit 4:Negative limit 32768:Emergency stop
2152+03	Digital input IN3 function selection	R/W/S	4	0-32768	1:Home signal 2:Positive limit 4:Negative limit 32768:Emergency stop
2153+01	Digital input IN1 filter time	R/W/S	1000	50-60000	unit: us
2153+02	Digital input IN2 filter time	R/W/S	1000	50-60000	unit: us
2153+03	Digital input IN3 filter time	R/W/S	1000	50-60000	unit: us
2154+00	Level polarity of digital inputs IN1,IN2,IN3	R/W/S	0	0-7	0:Low level Optocoupler has no input, port is in free status; Optocoupler has no input , port is in trigger status 1: High level Optocoupler has no input, port is in trigger status; Optocoupler has no input , port is in free status bit0: IN1 polarity setting; bit1: IN2 polarity setting; bit2: IN3 polarity setting.
2155+00	Digital input IN1,IN2,IN3 level	R/W/S	0	0-7	Read input IO port polarity Low 3 bits corresponding external 3 input IO port 0:Three digital input IN1,IN2,IN3 are low level 7:Three digital input IN1,IN2,IN3 are high level

60FD+00	Input port status display	R	0		bit0: Negative limit; bit1: Positive limit; bit2: Home signal bit3-bit15: Reserved; bit16: Emergency stop
60FE+01/02	Output port status display	R	0		When IO output function switch to main station control, master controller can use the combination of 60FE+01 and 60FE+02 to control IO output: When bit16 of 60FE+01and 60FE+02 are both "1", OUTPUT1 have output When bit17 of 60FE+01and 60FE+02 are both "1", OUTPUT2 have output and so on…… (EM556-CAN has only one output port)
1010+01	Save configuration	R/W			Write 1702257011 (0x65766173) to save configuration
1011+01	Reset to factory	R/W			Write 1684107116 (0x64616F6C) to reset to factory
2093+00	Eliminate malfunction records	R/W			Write 1 to eliminate alarm records

Notes: (1) R/W/S means the parameter can be read/wrote/saved

4.5.2 Model and control

CANopen Address	Name	property	Description
6040+00	Control word	R/W	Control the drive's status and operation
6041+00	Status word	R	Feedback current status of the drive
6060+00	Operational mode	RW	1: Position mode 3: Speed mode 6: Homing mode
6061+00	Mode query	R	Check the operation mode of the drive
607A+00	Target position	R/W	Target position under working mode 1
6064+00	The actual position	R	The actual position
6081+00	Maximum speed	R/W	Maximum speed under working mode 1 (Position mode)

60FF+00	Target Speed	R/W	Target speed under working mode 3 (Speed mode)
606C+00	Actual speed	R/W	The actual speed of the motor, unit: p/s
6083+00	Acceleration speed	R/W	Acceleration speed under working mode 1 (Position mode) and working mode 3 (Speed mode), unit: p/s^2
6084+00	Deceleration speed	R/W	Deceleration speed under working mode 1 (Position mode) and working mode 3 (Speed mode), unit: p/s^2
6085+00	Deceleration speed of emergency stop	R/W	Deceleration speed of emergency stop under all modes, unit: p/s^2
6098+00	Method of back to home position	R/W	Method of back to original point
6099+01	Speed1 of back to home position	R/W	Back to home position in high speed
6099+02	Speed1 of back to home position	R/W	Back to home position in low speed
609A+00	Acceleration speed of back to home position	R/W	Acceleration speed of back to home position
607C+00	Home position offset	R/W	Home position offset

EM556-CAN can running under PP(position mode),PV(speed mode)and Homing(Back to the original point mode), 3 modes in total.**(Specific protocol specification is in conformity with standard Canopen, specific operation can refer to 《DM-CAN series CANopen Technical instruction manual》)**

4.6 Parameters Configuration via Leadshine CANopen Software

4.6.1 Installing software

When you connect the CAN to USB adapter to the PC fist time, it will have a pop-up of installing the drive software, checking whether the installation is successful when the equipment manage of computer showing:

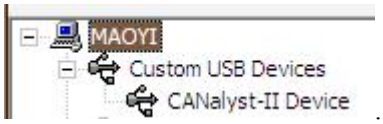

. Then please access http://www.leadshine.com to download Leadshine CANopen software and unzip to use directly via clicking the icon 

.

4.6.2 Connecting Leadshine CANopen software

Before connecting the EM556-CAN to PC through a CAN to USB adapter, please ensure the right wiring refer to the following figure:

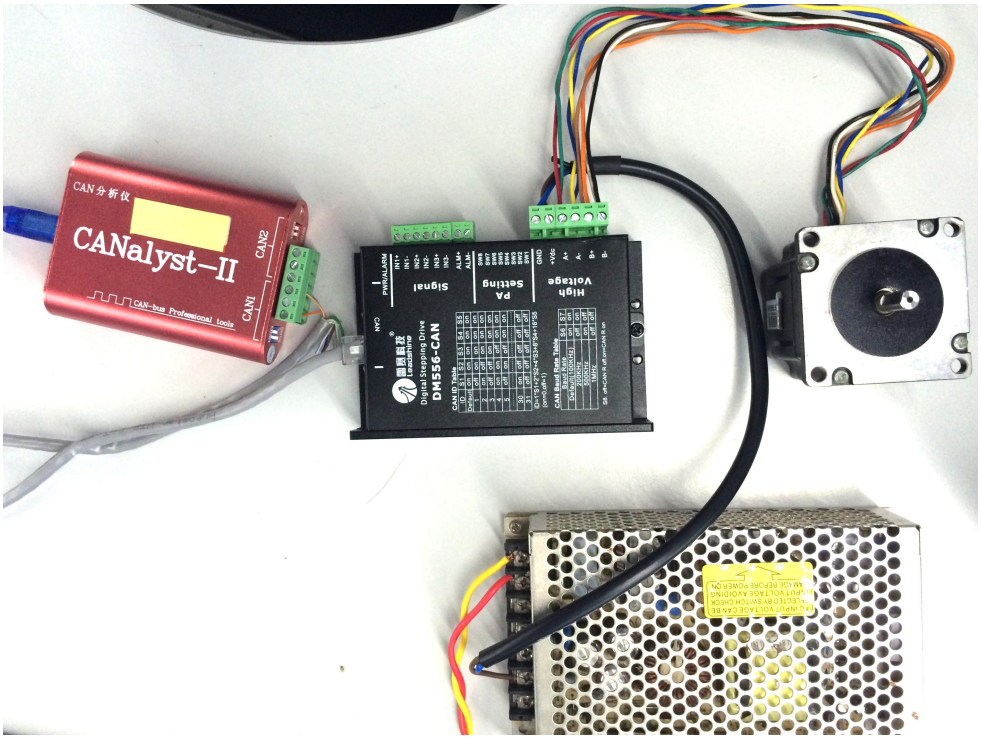

(1) Connect with PC software

Click the Leadshine CANopen software folder and double click the icon 

to open the software as following picture.

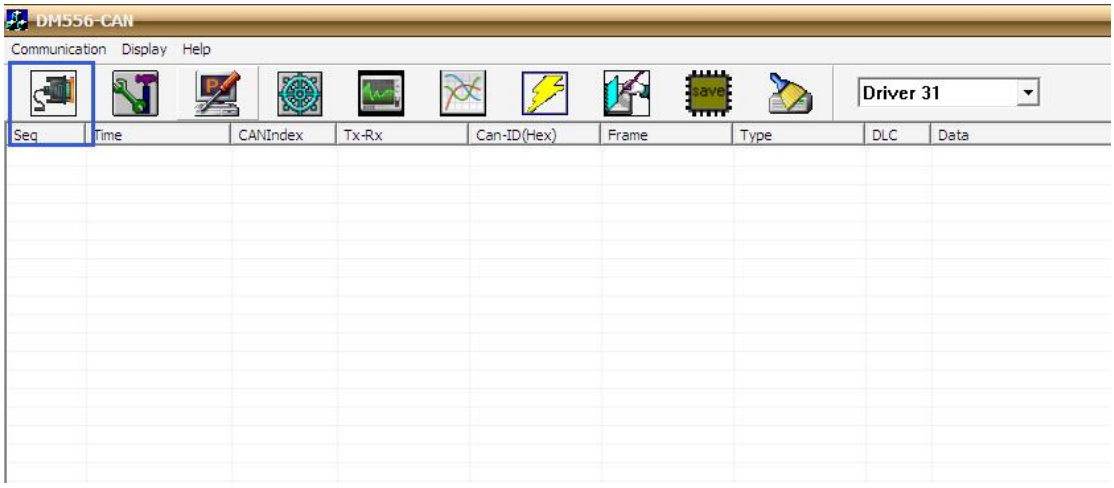

Then click the marked icon as above picture to open the connecting interface as following picture, setting the correct baud rate and CAN-Index on the adapter, and the design of Leadshine CANopen software is based on the USB_ CAN2 device. After setting the ①②③ step in the above picture, then clicking the button of 'Connect'

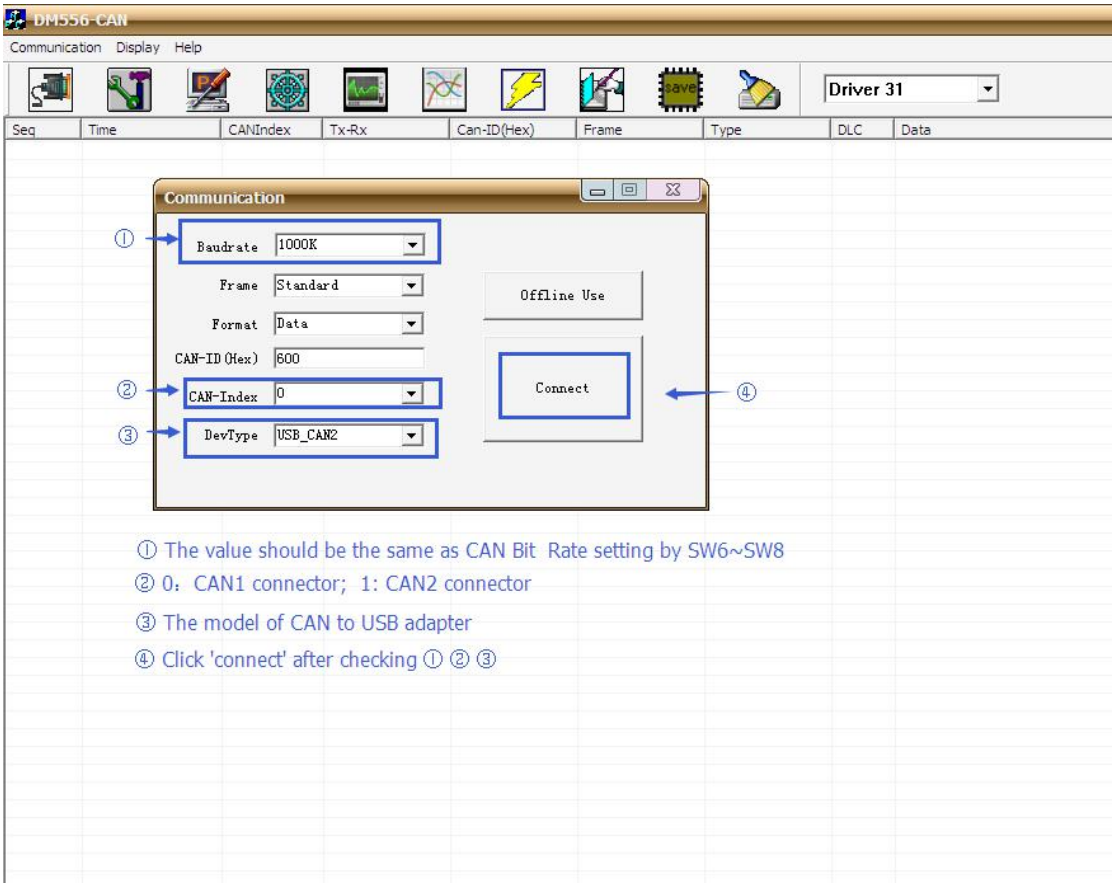

Open another interface as following picture, please select the correct CAN ID setting by SW1-SW5, when showing the step ② character string, it means that the EM556-CAN connect with PC software successfully.

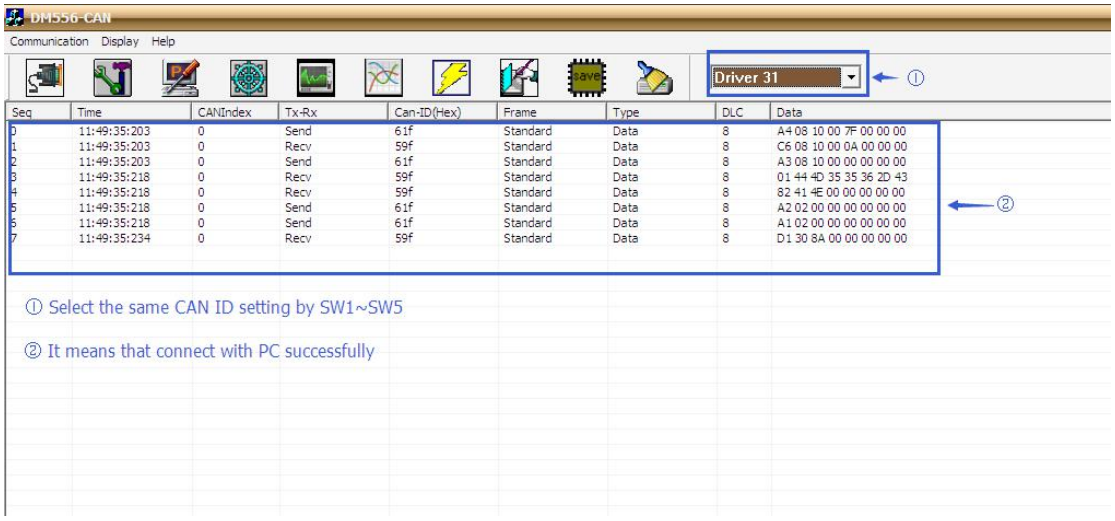

(2) Parameters configuration

Click the icon of  , it will upload the default parameter as following picture.

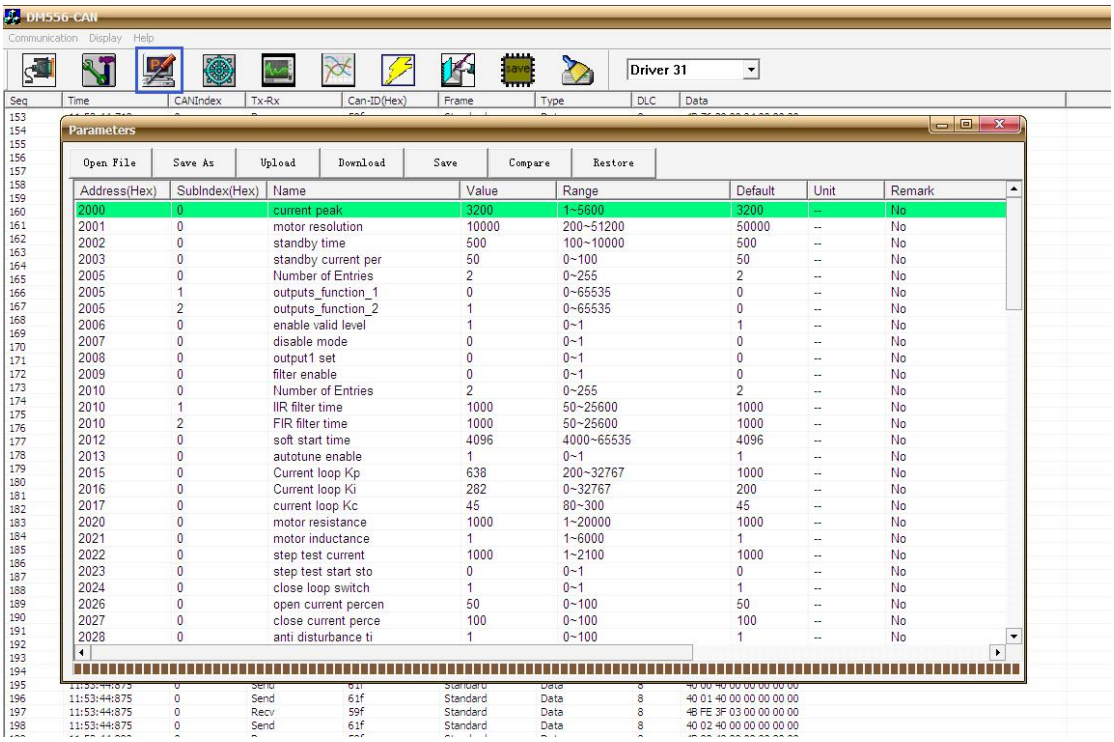

You also can import a configured file to cover the default parameter via clicking button①, after modifying the parameters, you need to click button③ and ④, then the parameters will be saved even if restart the power. After finishing setting parameter, you also can export the parameters file and save it by clicking button②.

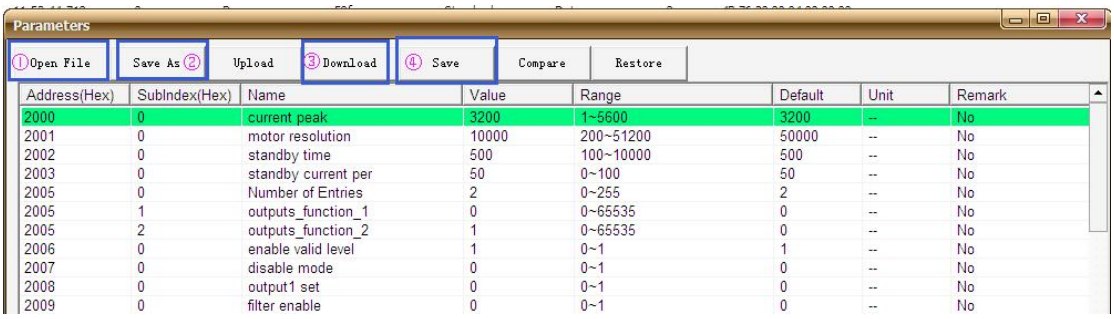

Key parameter:

Address	Name	Detail
2000	Current peak	Peak current output of the drive
2001	Motor resolution	Microstep
2002	Standby time	After this time that the output current of drive will be declined
2003	Standby current per	The holding current is equal to the percent of dynamic current
2008	Output 1 set	The impedance-state output of the ALM
2152	Input io functions	The functions configuration of input1, input2, input3
2154	Input io configure	The level of the input1, input2, input3 ports

(3) Run the motor

According to the steps in the following picture, the motor will be locked the motor shaft and ready to run.

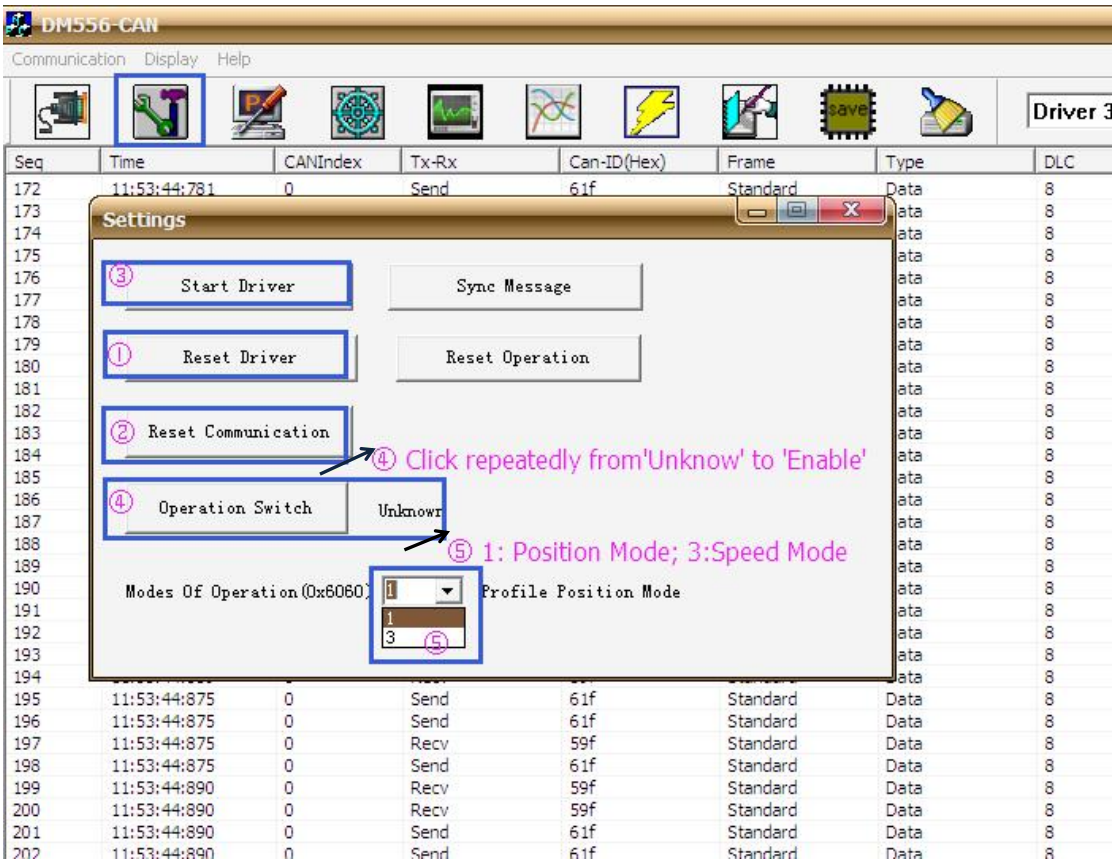

Configure the suitable motion parameter as following picture, the motor will turn up.

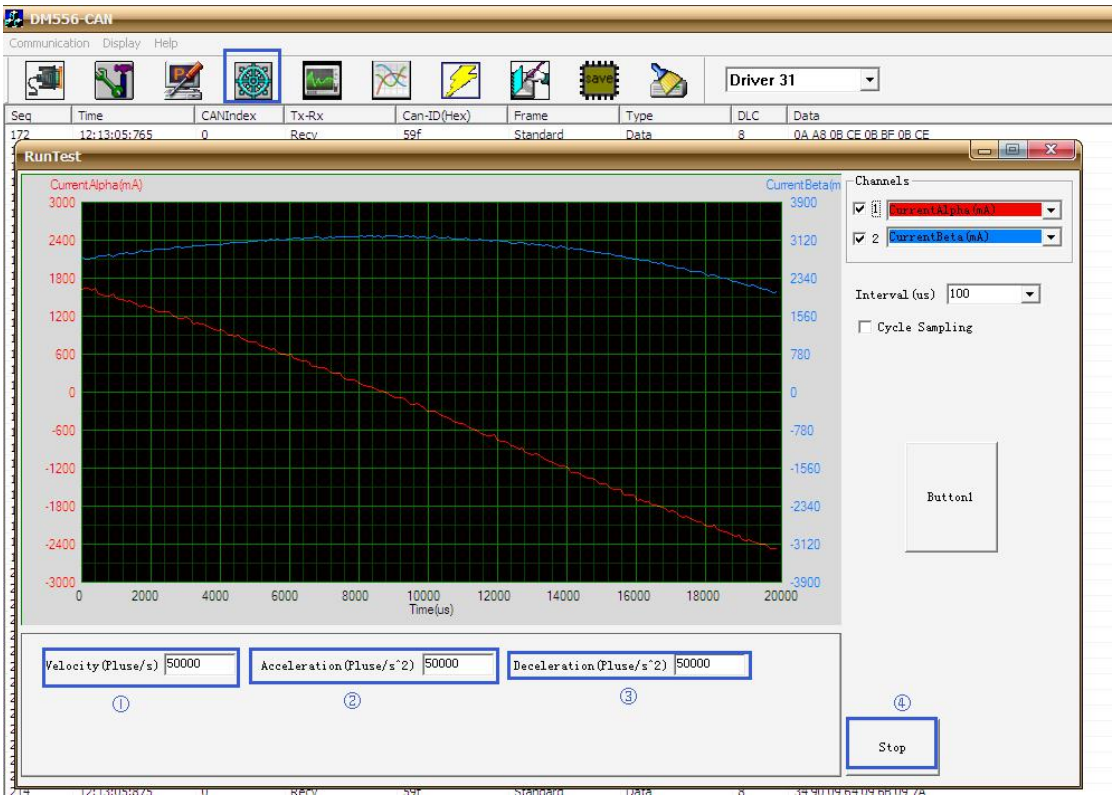

As usual, the drive will auto-tuning the motor to output its optimal performance, but if you prefer to tuning the Kp and Ki of current loop through manual operation, please set the 2013H to ‘0’ and click the 

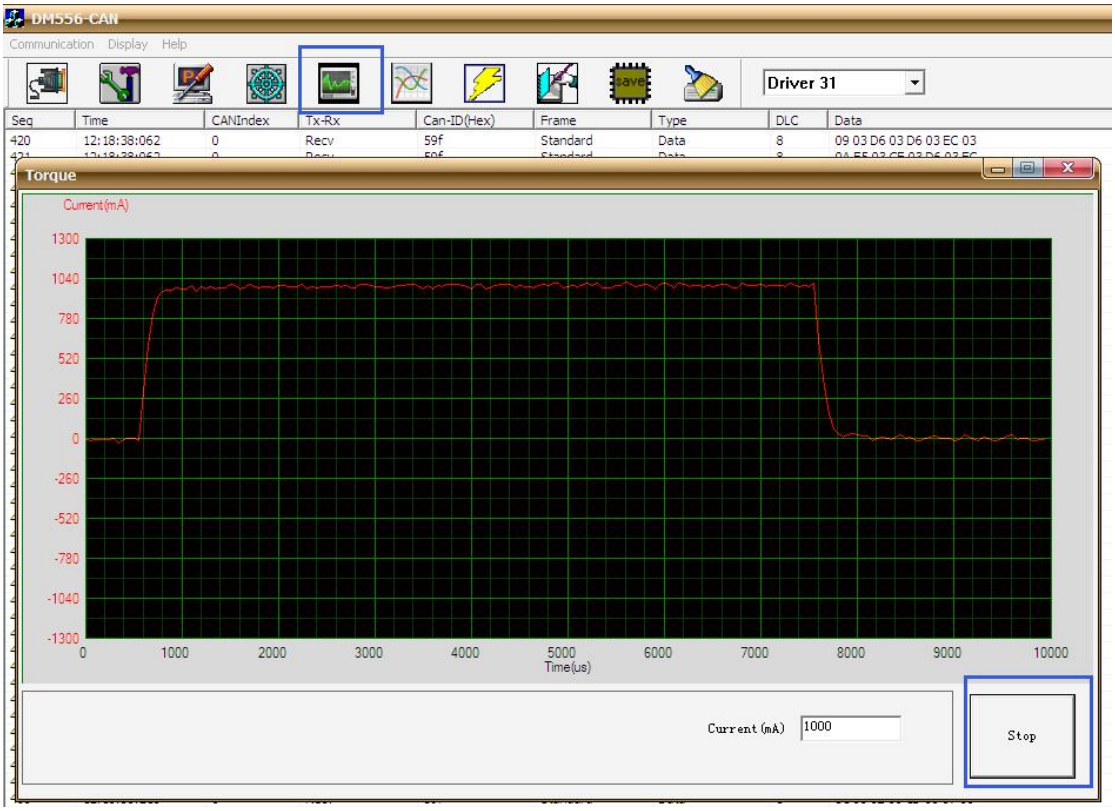

Click  icon to open this window. You can monitor the current wave in this window to check the performance.

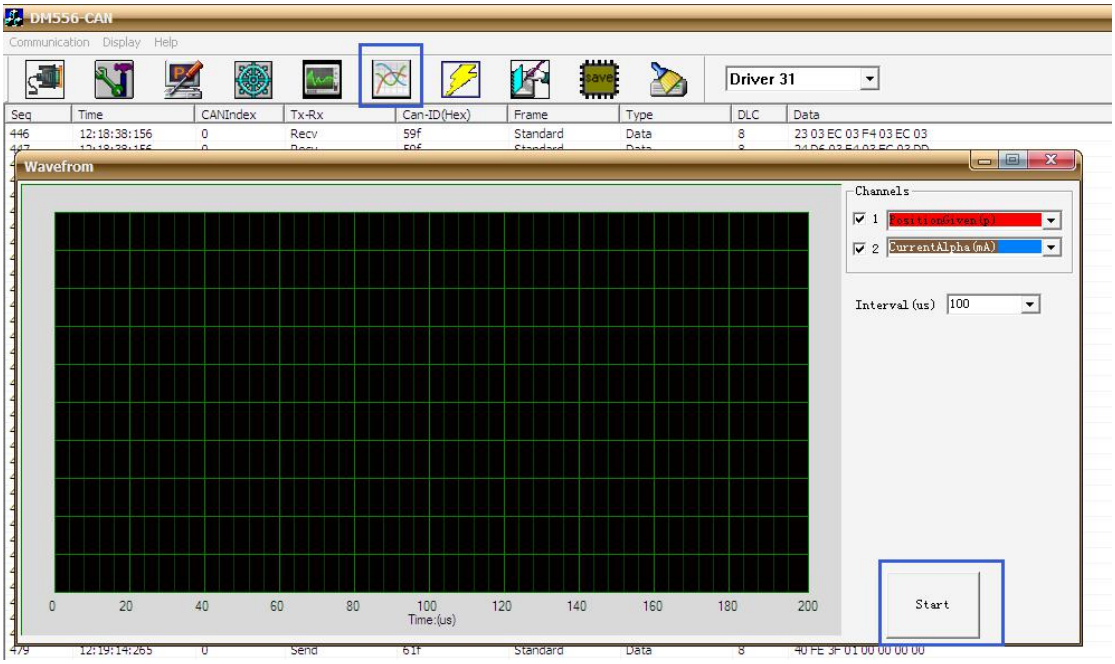

You can click the  to check the the active error or the error log of the drive in this window.

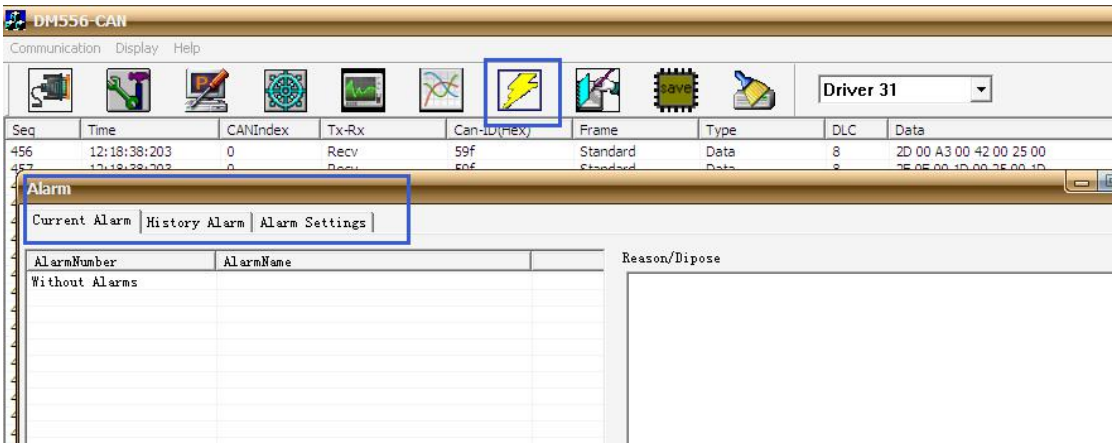

5. CANopen Communication Overview

This chapter only briefly introduce frequently used concept and matters need attention when using EM556-CAN. In order to make the users can understand conventional method of DM-CAN series products in shortest time. If you need to know the DM - CAN series more detailed CANopen technical content, please refer to 《DM-CAN series CANopen Technical instruction manual》.

5.1 EM556-CAN Communication Standard

- Follow CAN 2.0A standard
- Conform to CANopen standard protocol DS 301 V4.02
- Conform to CANopen standard protocol DSP 402 V2.01

5.2 Explanation of Nouns

5.2.1 Object dictionary

Object Dictionary is an organized group of objects, which maps the stepper drive related parameters and variables. Each object using a 16-bit index values to addressing. In order to allow access to the data structure of a single element, defines a 8 bits sub-index at the same time

For example:

- Object dictionary 2001H signify motor resolution.
- Object dictionary 607AH signify target position of position mode.
- Sub-index 01 of object dictionary 6099H signify back to the home position at high speed, Sub-index 02 signify back to the home position at low speed.

Notice **Not**es: (1) As above, 2001H,6081H,6099H are 16 bits address index; (2) Some object dictionary's sub-index is 0 as pointing to a single data objects.

Detailed definition of object dictionary is described in electronic data sheets(EDS), you can download EM556-CAN's EDS in Leadshine official website(http://www.leadshine.com).

The EDS contains three main kinds object dictionary is shown as follow:

- Communication object dictionary, such as 1000H,1400H,1A00H etc. Please refer to 《DM-CAN series' CANopen technical instruction manual》 for detailed specification.
- The drive manufacturers custom object dictionary, such as 2000H-2130H, please refer to chapter 4 for relevant information of parameters.
- Part of CIA DSP402 object dictionary

5.2.2 Process data objects (PDO)

(1) Definition

PDO Can be understood as an interface between stepper drive and external real-time data transmission, divided into transmitting PDO(TPDO) and receiving PDO (RPDO). Transmitting and receiving just relative to Leadshine CANopen drive (Such as the PDO which is transmitted from EM556-CAN is named TPDO), EM556-CAN can support 3 groups of TPDO and 3 groups of RPDO at present.

(2) PDO meaning

Each PDO can support maximum 8 bits data, and the meaning of object dictionary is configurable. For example the meaning of RPDO1's can be set different object dictionary such as control word(6040H) or target location(6081H). Specific setting method can refer to chapter 2.6 "Process data objects (PDO)" 《DM-CAN series' CANopen technical instruction manual》.

RPDO	Address to Set RPDO meaning	TPDO	Address to set TPDO meaning
RPDO1	1600H	TPDO1	1A00H
RPDO3	1602H	TPDO3	1A02H
RPDO4	1603H	TPDO4	1A03H

Notes: (1) Recommend to reduce the quantity of using PDO unless it's necessary, in order to reduce the network load.

(3)PDO property

PDO need to configure multiple properties, including transport is synchronous or asynchronous, the length of prohibit time, they are configured by modify corresponding address of the following chart.

RPDO	Address to Set RPDO Properties	TPDO	Address to Set TPDO Properties
RPDO1	1400H	TPDO1	1800H
RPDO3	1402H	TPDO3	1802H
RPDO4	1403H	TPDO4	1803H

The suggestion for setting PDO properties:

(1) Synchronous or asynchronous?

- Synchronous transport means that the corresponding data of PDO will update when synchronization frame emerge on data bus. It can bring stable data updating periodically, but can't receive real-time change data.

- Asynchronous transport means that update the data immediately once the data change, this way of transmission can quick response, but easy to have larger data load on the bus in case of data changing frequently(such as real-time position data). So you need to configure a prohibit time (the changing data can be updated in some time setting by prohibit time, not transmitting repeatedly) to reduce network load.
- Recommended to adopt synchronous PDO mode in case of the real-time data is necessary, but in the case of that he real-time request is necessary, to adopt asynchronous PDO mode ,and set suitable prohibit time to protect the network load from the shock.

(2) Synchronous cycle and asynchronous prohibit time settings

Recommended to calculate according to empirical formula:

Synchronizing cycle (ms)=[PDO amount/9] /(40%) +2

Assume that a CANopen network with a total of 12 axis, each axis has a send and receive PDO. The total number of the PDO is 12 * 2 = 24. In case of bus full load, can transmit 9 PDO in a millisecond, considering the bus load margin, To assume that the bus load is 40%(relatively reasonable load rate), the time required for transmit 24 PDO is: 24/9/(40%)=6.67(ms), considering the network expenditure time of SDO, synchronous frame, heartbeat packets, Emergency packets etc. Add extra 2 milliseconds, recommended configuration synchronization cycle to be 8.67 milliseconds.
Above empirical formula also apply to set asynchronous PDO prohibit time.

5.2.3 Service data object (SDO)

(1) SDO and PDO

SDO is a approach to access object dictionary. Compare with PDO which mapping fixed object dictionary, SDO can access any specified object dictionary, with greater flexibility. But each of the SDO data packet contains only 4 process data. And the SDO data interaction complement need 2 packets. So the transmission efficiency of SDO is lower than the PDO.

(2) Suitable object

Based on the transmission characteristics of SDO and PDO. PDO is suitable for real-time data transmission, Such as receiving real-time position and speed commands, transmit real-time speed and position data, etc. SDO is suitable for non-real-time data transmission (one-off operation). Such as modify a dictionary object.

(3) SDO transmission mode

There are 3 kinds of SDO transmission mode: Acceleration SDO transmission mode , Segmented transmission mode , Block transmission mode. Under the condition of data transmission less than 4 bytes, can transmit SDO data without segment , this kind of transmission mode is suitable for most of the objects. If the data is more than 4 bytes, must adopt segmented transmission mode. For a long packet, it has low efficiency if adopting segmented transmission, but block transmission has a better efficiency..

(4) The definitions of client and server

SDO Visitors are referred to as the client. A device whose object dictionary is accessed and shall provide the requested service are referred to as server. The customer CAN packet and the server' response CAN packet always contains 8 bytes of data (Although not all data bytes must be meaningful). A client's request must have a response from the server. Please refer to chapter "2.7 service data object(SDO)" of 《DM-CAN series CANopen technical instruction manual》

5.2.4 Homing mode

DM-CAN Series drives define various homing method according to the CANopen DS402 standard protocol. Because EM556-CAN is open loop stepper drive, supported 17-30 homing mode currently. Specific motion trail of various homing

method is shown as below:

17:

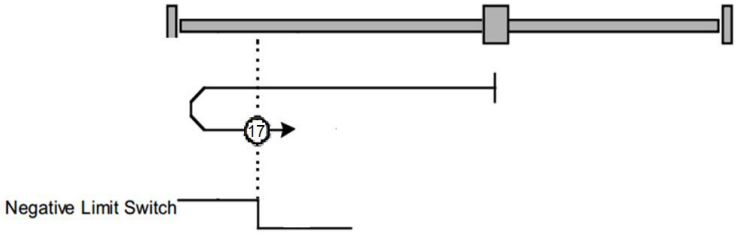

18:

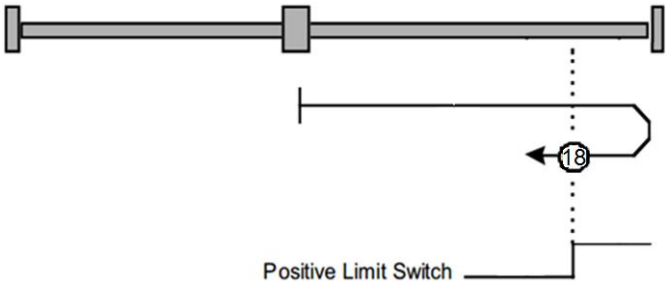

19-20:

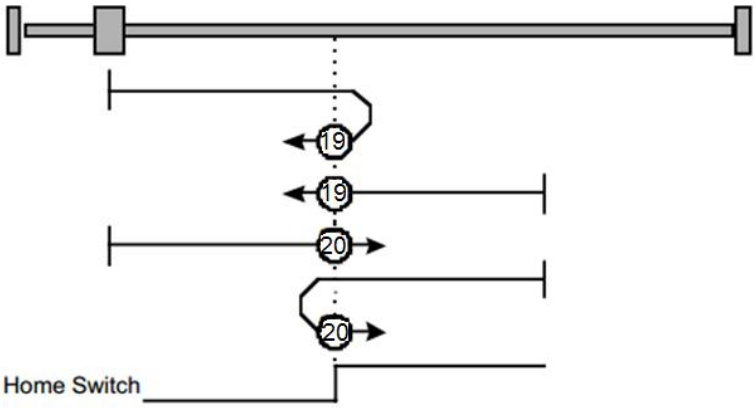

21-22:

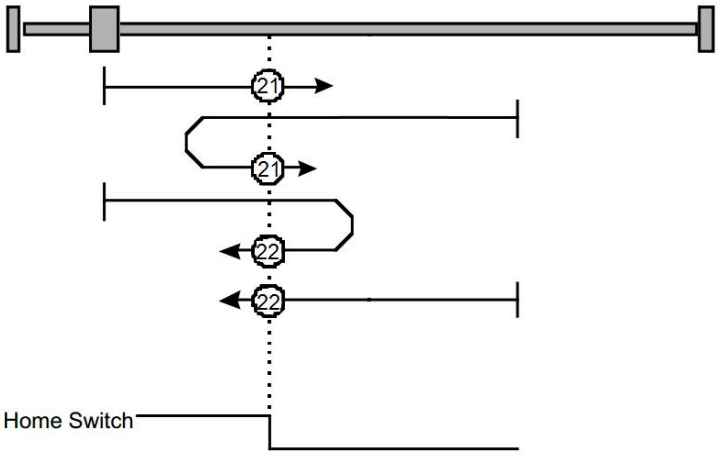

23-26:

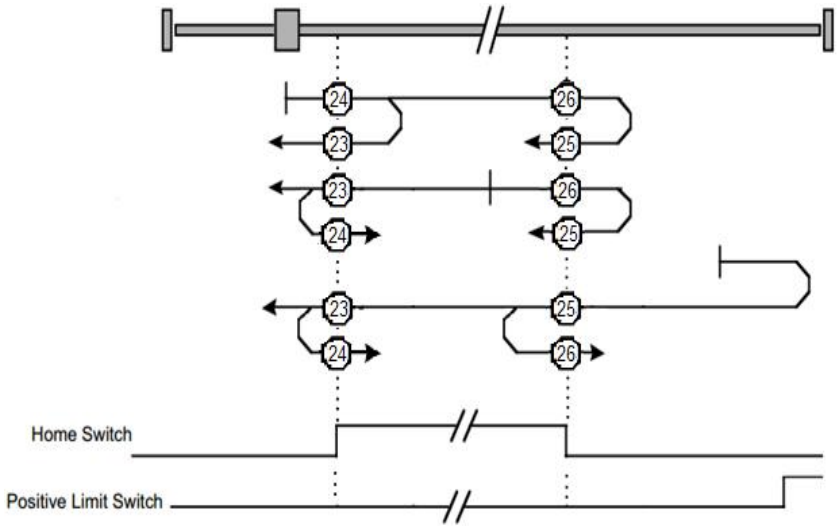

27-30:

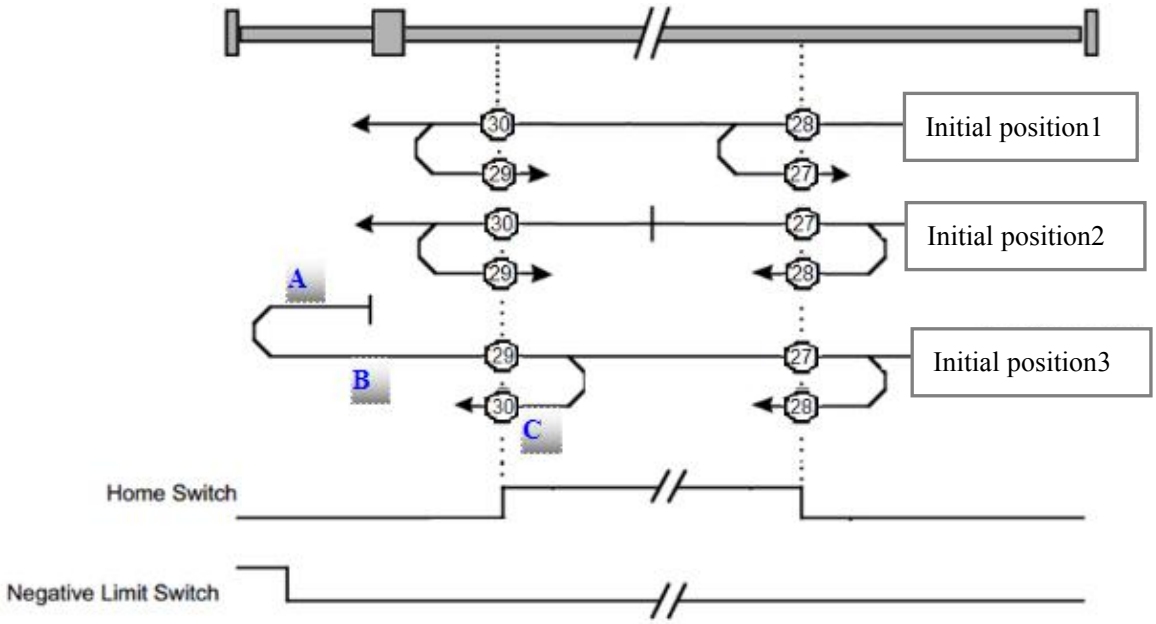

Figure9 No.17-30 homing method

(1) Homing movement speed

Homing movement speed contains high speed and low speed. Take the direction of the last track in homing movement as a reference, which with the same direction is low speed movement and opposite is high speed movement.

Take No.30 for example, last track as show in figure9. C section which is the last track of homing movement, its direction is leftwards. Therefore, A/C section whose direction is leftwards are low speed. B section whose direction is rightwards are low speed.

(2) Track description

Take No. 27-30 homing mode for example, above tracks in the same figure, is to facilitate describe similar track's homing mode, also facilitate compare differentials. As shown in figure 9, tracks can be divided into three segments according to the different initial position:

Initial position 1 (between home switch and positive limit)

Sliding block move from the right of the home switch to the left, after meeting the home switch,

a. Under No.28 homing mode, the sliding block will stop immediately.
b. Under No.27 homing mode, the sliding block will slow down to 0, then turn right to stop immediately when meeting the home switch again.
c. Under No 29/30 homing mode, the sliding block will move left until leaving the home switch,
- Under No.30 homing mode, the sliding block will stop immediately
- Under No.29 homing mode, the sliding block will slow down to 0 , then turn right to stop immediately when meeting home switch again.

Initial position 2 (at home switch)

Sliding block start to move at the status of home switch is triggered,

a. Under No.27/28 homing mode, the sliding block will move right until leaving the home switch
- Under No.27 homing mode, the sliding block will stop immediately
- Under No.28 homing mode, the sliding block will slow down to 0, then turn left to stop immediately when meeting home switch again.

b. Under No.29/30 homing mode, the sliding block will move left until leaving the home switch
- Under No. 30 homing mode, the sliding block will stop immediately
- Under No. 29 homing mode, the sliding block will slow down to 0 , then turn right to stop immediately when meeting home switch again.

Initial position 3 (between home switch and negative limit)

Sliding block move from the left of the home switch to the right, after meeting the negative limit, it will slow down to 0 and turn right until meeting home switch,

a. Under No. 29 homing mode, the sliding block will stop immediately
b. Under No. 30 homing mode, the sliding block will slow down to 0 and turn left, it will stop immediately when meeting home switch again.
c. Under No.27/28 homing mode, the sliding block will move right until leaving the home switch,
- Under No. 27 homing mode, the block will stop immediately
- Under No. 28 homing mode, the block will slow down to 0, then turn left to stop immediately when meeting home switch again.

The rest of the various tracks of homing mode, please refer to definition of CANopen DSP 402 standard protocol. The mode of comprehending is similar with above figures.

6. Trouble Shooting

Description	Likely cause	Recommended Actions
Motor is not rotating	Wrong wiring	Check power, motor and communication cables wiring
	Parameter configuration is wrong	Check the parameters configuration in object dictionary is wrong or not
	Drive is protected	Reset power

Motor rotates in the wrong direction	Wrong wiring	Exchange the two cables of any phase (Such as A+/A-)
	Parameter configuration is wrong	Check the parameters configuration in object dictionary is wrong or not
The drive in fault	Wrong wiring	Check the wiring of motor cable is short-circuit or not, and the polarity of power supply is inverse or not
	Over voltage	Check whether the power supply voltage is reached over voltage point
	Motor or drive damaged	Replace the motor or drive
Wrong position	Motor resolution setting is wrong	Set a correct motor resolution
	Output current of drive is too small	Increase the output current
Stall during motor acceleration	Acceleration time is too short	Increase the acceleration time
	Motor torque is too small	Choose high torque motor
	Power supply voltage or output current setting is too small	Appropriately increase voltage or current
Fail to connect with master station	Communication error	Refer to the manual of master station alarm and processing. Check the communication cable is normal or not, and remember plug a terminal resistance in the end node of the network.

7. Warranty

Twelve Month Warranty

Leadshine Technology Co., Ltd. warrants its products against defects in materials and workmanship for a period of 12 months from shipment out of factory. During the warranty period, Leadshine will either, at its option, repair or replace products which proved to be defective.

Exclusions

The above warranty does not extend to any product damaged by reasons of improper or inadequate handlings by customer, improper or inadequate customer wirings, unauthorized modification or misuse, or operation beyond the electrical specifications of the product and/or operation beyond environmental specifications for the product.

Obtaining Warranty Service

To obtain warranty service, please contact your seller to obtain a returned material authorization number (RMA) before returning product for service.

Shipping Failed Products

If your product fail during the warranty period, please contact your seller for how and where to ship the failed product for warranty or repair services first, you can also e-mail customer service at tech@leadshine.com to obtain a returned material authorization number (RMA) before returning product for service. Please include a written description of the problem along with contact name and address.

8. Contact Us

China Headquarters

Address: Floor 11, Block A3, Nanshan iPark, Xueyuan Avenue 1001, Shenzhen, Guangdong, 518055, China

Web: http://www.leadshine.com

Sales Hot Line:

Tel: 86-755-2643 4369 (for All)

86-755-2641-7674 (for Asia, Australia, Africa areas)

86-755-2640-9254 (for Europe, America areas)

Fax: 86-755-2640-2718

Email: sales@leadshine.com.

Technical Support:

Tel: 86 755-2641-8447 and 86-755-2647-1129

Fax: 86-755-2640-2718

Email: tech@leadshine.com.

Leadshine U.S.A

Address: 26050 Towne Centre Dr. Foothill Ranch, CA 926 USA

Tel: 1-949-608-7270

Fax: 1-949-608-7298

Web: http://www.leadshineusa.com

Email: sales@leadshineusa.com and support@leadshineusa.com.